SPECTROMAXx

76004145 / 76004146 / 76004150



Stationary metal analyzer

Original operating instructions

11.03.2026 | Version 3.00

Table of Contents

1 Description of instrument 5
1.1 Description 5
1.1.1 Explanation of the model number 5
1.2 Function 6
1.3 Overview 7
1.3.1 Instrument (front) 7
1.3.2 Unit (left side) 8
1.3.3 Instrument (right-hand side) 9
1.3.4 Instrument (back) 10
1.3.5 Spark stand 11
1.3.6 Spark stand insert 12
2 Safety 13
2.1 Symbols used 13
2.2 User information 15
2.3 Intended use 16
2.3.1 Samples 17
2.3.2 Preparing the Sample 17
2.3.3 Sample material 18
2.3.4 Sample weight 19
2.3.5 Gas cleaning cartridge 19
2.3.6 Spark stand 19
2.3.7 Sample clamp 20
2.3.8 Gas supply 20
2.4 Prohibited operating conditions 21
2.5 Misuse 21
2.6 Residual risks 22
3 Technical data 24
4 Transportation/Setting-up 26
4.1 Space requirements 27
4.2 Storage 27
4.3 Gas supply 28
5 Initial start-up 29
5.1 Preparing the instrument for use 29

6 Operation 30
6.1 Overview of controls 30
6.2 Switching on the instrument 31
6.2.1 Argon saving module 31
6.3 Switching off the instrument 32
6.4 Measuring procedure 33
6.4.1 Preparing the measuring procedure 34
6.4.2 iCALising the measuring device (iCAL) 34
6.4.3 Changing the base (multi-base instruments only) 35
6.4.4 Start the measurement 36
7 Maintenance 37
7.1 Maintenance Reminder 37
7.2 Maintenance schedule 38
7.3 Cleaning the UV optics light inlet window 39
7.4 Cleaning the spark stand 43
7.5 Exhaust filter system - Change filter insert 48
7.6 Exhaust filter system - Inspecting the gas-washing bottle 50
7.7 Replacing the filter mats 52
7.7.1 Housing of air filter 52
7.7.2 Optic air filter 53
7.8 Replacing the ICALization sample 54
7.9 Cleaning agents 54
8 Status messages 55
9 Troubleshooting 56
9.1 Error messages 58
9.2 Diagnosis tool SPECTRO Spark Analyzer Pro MAXx 59
9.3 Diagnosis tool SPECTRO Spark Analyzer Pro 59
10 Spare parts and consumables 60
11 De-commissioning 61
12 Manufacturer address 62

1 Description of instrument

1.1 Description

Instrument:	SPECTROMAXx
Model:	LMX09 / LMX10 / LMX10.5
Type/Part No.:	76004145 / 76004146 / 76004150

1.1.1 Explanation of the model number

LM X Y 9

- Y: 1 = Floor instrument; 0 = Benchtop instrument
- X: A = Advanced; B = Standard

LM X Y 10 Z

- Z: K = including potassium option; _ = without potassium option
- Y: 1 = Floor instrument; 0 = Benchtop instrument
- X: A = Advanced; B = Standard

LM X Y 10.5 Z

- Z: K = including potassium option; _ = without potassium option
- Y: 1 = Floor instrument; 0 = Benchtop instrument
- X: A = Advanced; B = Standard

1.2 Function

Sample material is evaporated by spark discharge inside the unit. In this process, the released atoms and ions are excited and emit light. This light is directed into the optical systems and measured using sensors.

Calibration data are already stored in the unit's memory. The measured values are compared with these data. The measured values are converted into concentrations and then displayed on the screen.

1.3 Overview

1.3.1 Instrument (front)

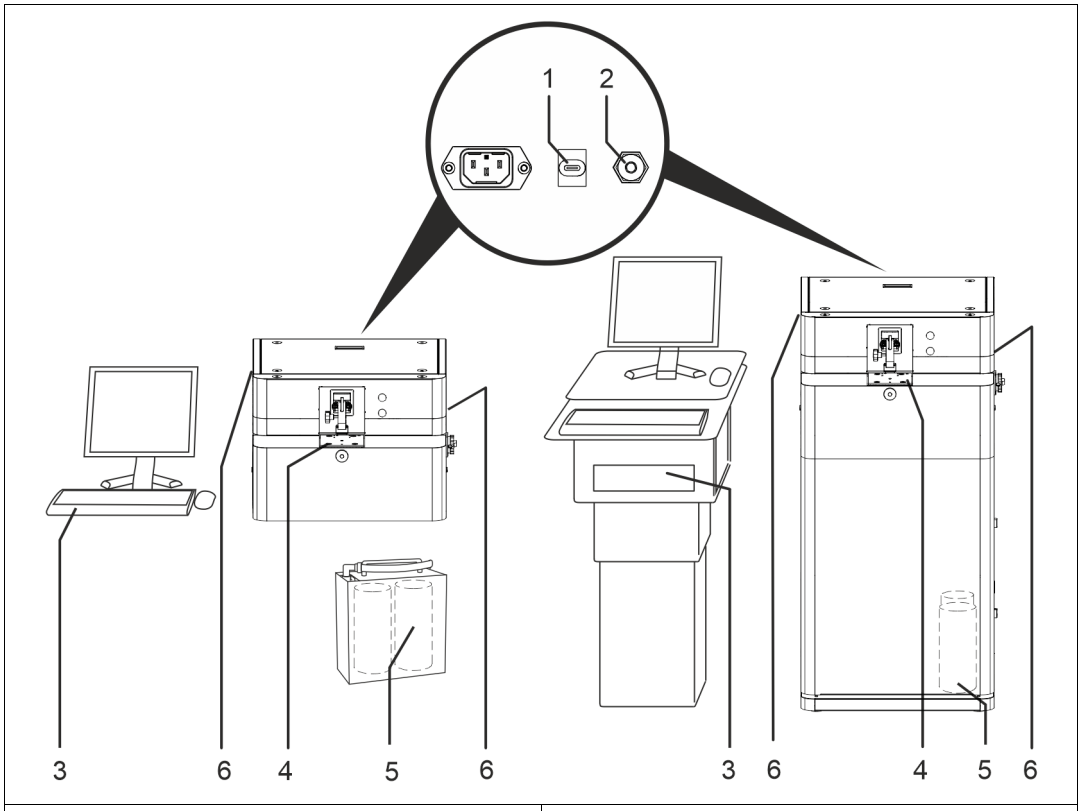

Benchtop instrument	Floor instrument

Fig. 1

No.	Component
1	PC data transmission socket
2	Argon connection
3	PC

No.	Component
4	Spark stand
5	Gas-washing bottle and filter bottle
6	Air filter

1.3.2 Unit (left side)

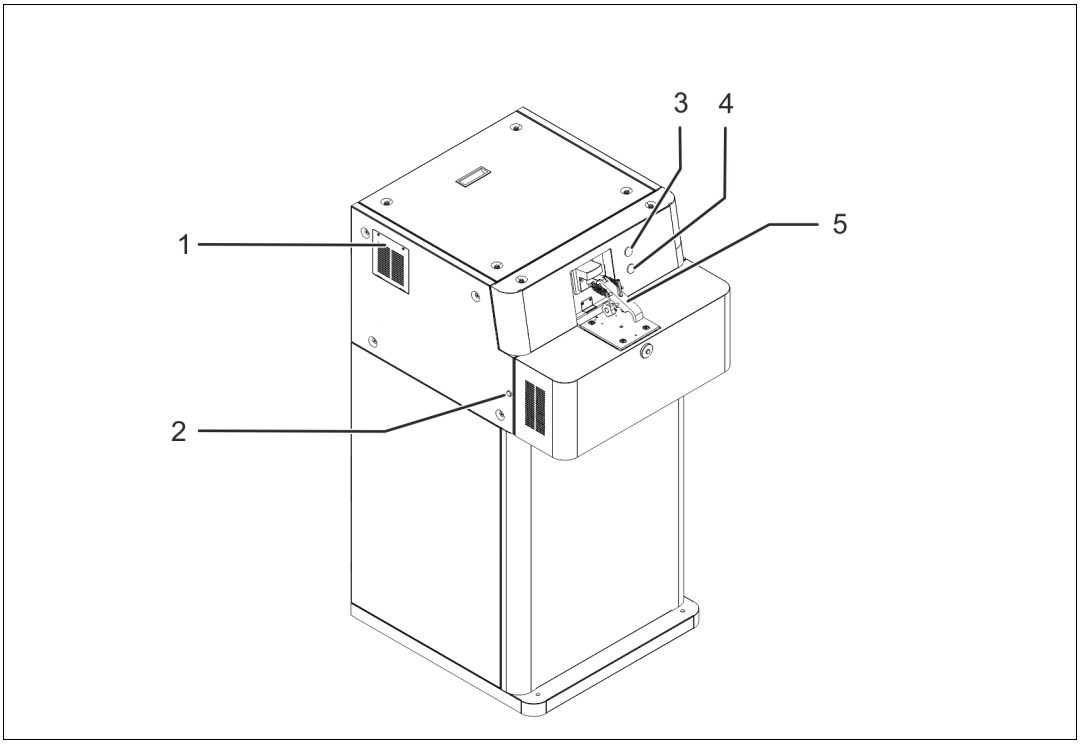

Fig. 2

No.	Component
1	Optic room filter mat
2	Unlocking mechanism for protective cover
3	Start/Stop measurement

No.	Component
4	On/Off switch spark excitation (plasma generator)
5	Sample clamp

1.3.3 Instrument (right-hand side)

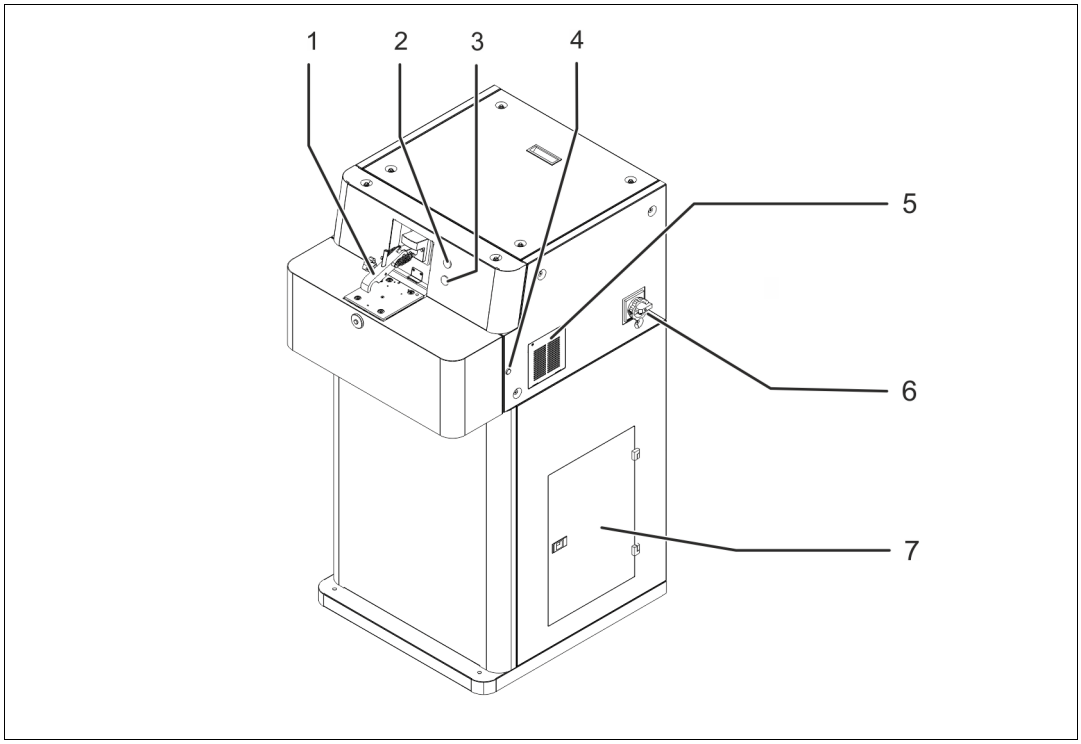

Fig. 3

No.	Component
1	Sample clamp
2	Start/Stop measurement
3	On/Off switch spark excitation (plasma generator)

No.	Component
4	Unlocking mechanism for protective cover
5	Filter mat housing
6	Main switch
7	Access to exhaust filter system (gas-washing bottle and filter bottle)

1.3.4 Instrument (back)

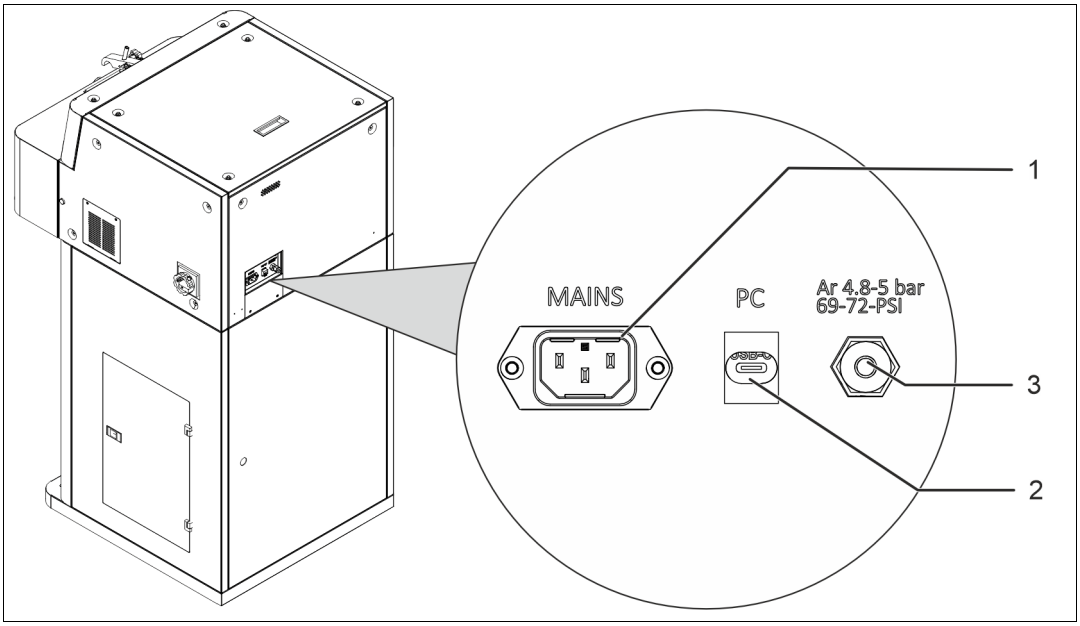

Fig. 4

No.	Component
1	Power connection socket
2	PC data transmission connection

No.	Component
3	Argon connection

1.3.5 Spark stand

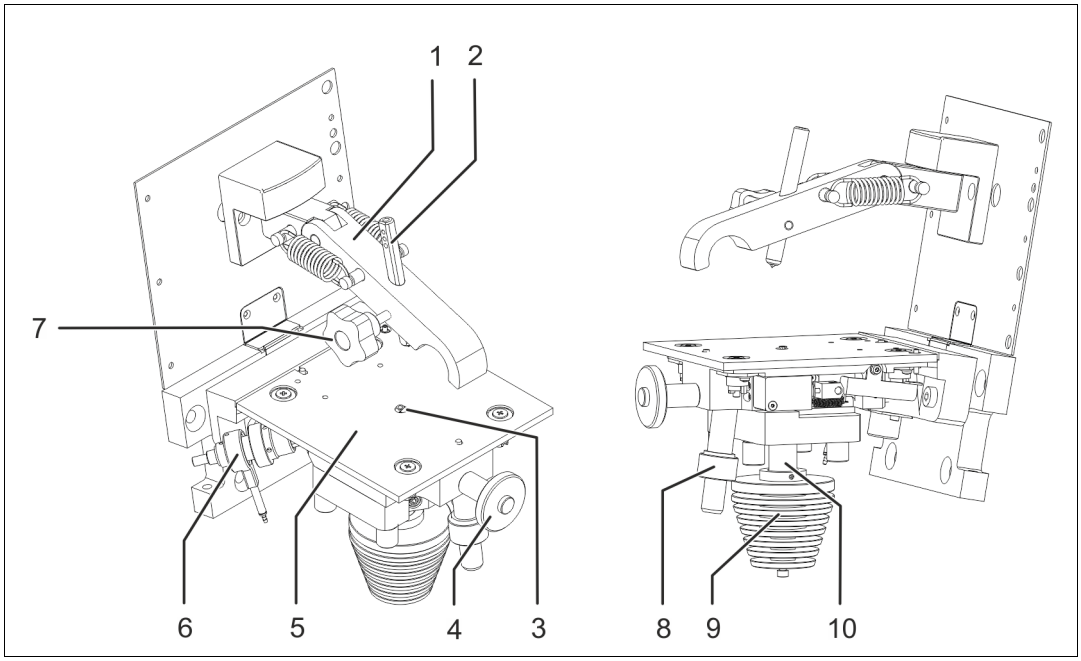

Fig. 5

No.	Component
1	Clamp (swinging)
2	Contact (movable)
3	Electrode and spark stand insert (below the spark stand plate)
4	Spacer
5	Spark stand plate
6	Holder for fiber-optics to air optics
7	Locking wheel for contact

No.	Component
8	Outlet to filter system
9	Heat sink
10	Electrode holder

1.3.6 Spark stand insert

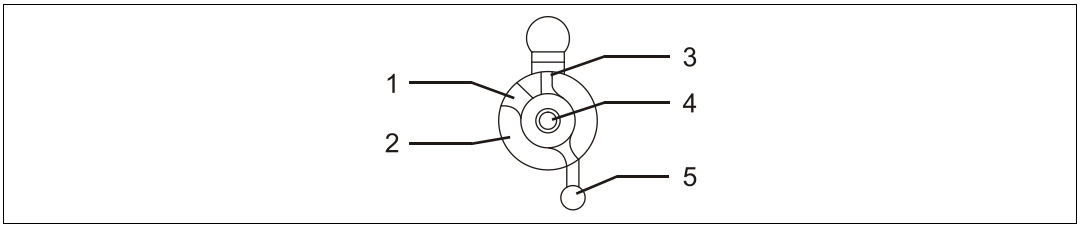

Fig. 6

No.	Component
1	Air optics light channel
2	Spark stand insert
3	UV optics light channel

No.	Component
4	Electrode
5	Argon outlet

2 Safety

Every user of the instrument must have read and understood these operating instructions. This applies in particular to the safety instructions.

2.1 Symbols used

The following symbols are used in these abbreviated operating instructions and/or on the instrument.

If required, additional important information is available in connection with these symbols.



General warning sign!



Warning! High voltage!



Warning! Flammable substances!



Warning! Hot surface!



Warning! Toxic substances!



Warning! Optical radiation!



Warning! Risk of hand injury!



Warning! Risk of laceration!



Warning! Risk of suffocation!

Notice!

This sign warns of activities or conditions that may adversely affect the function of the instrument.

Information

Displays information that is important for the correct and safe use of the instrument.

2.2 User information

- Non-compliance with the operating and safety instructions may lead to injuries and can cause a health hazard.
- Carefully read the manual and always comply with the safety instructions.
- If the instrument is located on an incline and equipped with castors, it can roll away during operation. Secure the instrument for operation.
- Only service personnel authorized by the manufacturer are permitted to unpack, install, set up, and connect the instrument.
- The instrument must only be connected to the power supply with a protective grounding conductor. The instrument must be operated only in a dry environment (protection class IP 20, DIN 60529).
- Disconnect the power plug before opening the instrument. The instrument is only completely disconnected from power if the power plug is removed.
- Never tamper with the safety devices! If it is suspected that a safety device does not work properly, shut down the instrument immediately. Please contact your Service Center.
- Compliance with the information labels on the instrument is mandatory.
- While operating and maintaining the instrument, compliance with all safety instructions and accident prevention regulations is mandatory.
- Compliance with the relevant safety regulations for the use of auxiliary aids and operating equipment is mandatory.
- If applicable, personal protective equipment (protective gloves, goggles, etc.) must be worn.
- Carry out only those maintenance tasks that are described in the chapter “Maintenance” of the operating instructions. The operating personnel are not permitted to perform any other maintenance work. Any further maintenance work (e.g. technical maintenance) or repairs must only be performed by service personnel authorized by the instrument manufacturer.
- Check the protective measures after every technical maintenance or repair activity. The checking procedure is carried out in accordance with DGUV V3 (German Social Accident Insurance) or an equivalent national regulation.
- Compliance with the maintenance schedule specified by the manufacturer and the recording of all maintenance activities is mandatory. This helps maintain the operational safety of the instrument.
- Only genuine spare parts must be used when repairing the instrument. If using components other than OME parts, the CE Declaration of Conformity shall be null and void.

2.3 Intended use

This instrument analyzes and identifies metals. Only such metals may be analyzed for which the instrument has been calibrated by the manufacturer or by qualified technical personnel.

Only the original accessories supplied with the instrument must be used and shall only be used indoors (laboratory environment).

The instrument is intended for use in the industrial sector. Electromagnetic interference may occur during the operation of the instrument. In this case, the manufacturer must be contacted.

Comply with the applicable occupational health and safety regulations relevant to the workplace and the samples used (hazardous substances).

- The instrument must only be operated in compliance with the defined time operating limits (operating time, shift sequence, maintenance & servicing specifications).
- The instrument is a stationary analyzer and it must not be moved during operation.
- During the operation of the instrument, compliance with the ambient conditions according to the technical specification is mandatory.
- During the operation, adequate air extraction and ventilation of the operating room must be ensured.
- The instrument must only be operated with the specified operating media at the max. specified pressures.
- Never attempt to disable safety devices.
- The instrument may only be operated with the front protective cover and the spark stand plate in place.
- Cleaning (decontamination) may only be performed with a cleaning agent specified by the manufacturer.
- Before using any cleaning or decontamination procedure other than the procedure specified by the manufacturer, the operating company of the instrument must check with the manufacturer that the intended method will not damage the instrument.
- The instrument must not be used with a data cable longer than 3 m (9.8 ft).

2.3.1 Samples

Only dry metal samples must be measured.



Warning! Risk of injury and health hazard!

Risk of injury and health hazard due to pressurized or combustible samples.

- Pressurized or flammable samples must not be measured.

2.3.2 Preparing the Sample





Warning! Harmful and toxic substances!

During the preparation of samples, e.g. during the grinding process, toxic vapors and toxic clouds of dusts may be generated, depending on the sample material.

- When disposing of these dusts, compliance with legal regulations and fire prevention instructions is mandatory.
- The operating company of the spectrometer shall be responsible for compliance with the limit values of the maximum permissible pollutant concentrations in the breathing air.
- During the preparation, compliance with the safety instructions provided by the manufacturer of the sample preparation machine is mandatory. Personal protective equipment must be worn.
  When preparing samples that could potentially release toxic substances, wearing protective goggles and the use of appropriate respiratory protection equipment is mandatory.

2.3.3 Sample material





Warning! Toxic substances!

- The sparking process produces a black precipitate (metal condensate). The condensate could be toxic or flammable, depending on the sample material. Metal vapors may be generated by sparks of the sample material. Depending on the sample material, these vapors may be toxic, e.g. if using heavy metals or other hazardous metals during the test.
  - ➔ Protective gloves and safety goggles must always be worn when cleaning the spark stand and when cleaning the gas-washing bottle or the filter bottle. This also applies when replacing the filter insert. If metals with toxic components have been sparked off, wearing a breathing mask to prevent the inhalation of condensate particles is mandatory.
  - ➔ When disposing of the condensate, compliance with legal regulations and fire prevention instructions is mandatory.
  - ➔ If the samples contain toxic substances, an extraction system must be installed at the spark stand.
  - ➔ In this case, the gas escaping from the spectrometer's exhaust pipe must be channeled to the outside of the building.
  - ➔ The installation of an extraction system and the discharge of the exhaust gas into the open air makes it easier to comply with the maximum permissible pollutant concentrations in the breathing air below the applicable limit values, MAK values (Maximale Arbeitsplatzkonzentration: maximum workplace concentration) or comparable national regulations. Compliance with these limits is the sole responsibility of the owner of the spectrometer. If samples with toxic components must be measured, further protective actions such as wearing breathing protection may be necessary.

2.3.4 Sample weight

The weight of the sample to be measured must not exceed 15 kg (33 lbs.).

2.3.5 Gas cleaning cartridge

The instrument contains a gas cleaning cartridge.

Only a qualified technician shall be permitted to change the gas cleaning cartridge.



Warning! Toxic substances!

The content of the gas cleaning cartridge is toxic.

- Compliance with the safety data sheet is mandatory. Click www.spectro.com/support/msds to download the data sheet.

2.3.6 Spark stand

The opening of the spark stand plate must be completely covered by the sample or the respective adapter.



Warning! Optical radiation!

The plasma in the spark stand generates UV radiation. UV radiation may cause damage to the eyes or skin.

- For samples that do not completely cover the spark stand opening, use the respective sample adapters in such a way that the opening is completely closed.
- Take appropriate protective measures (e.g. wear safety goggles) when the spark stand opening is not fully covered.

When maintaining the spark stand, compliance with the following information is mandatory:



Warning! Flammable substances!

- Do not vacuum the spark stand. The condensate could ignite an unsuitable vacuum cleaner.
- The exhaust filter of the vacuum cleaner may not be suitable for the pore size of the condensate.

2.3.7 Sample clamp

The sample clamp must have contact with the sample (the function circuit of the spark stand is closed).



Warning! High voltage!

The sample clamp provides the contact between the sample and the spark stand. There is a risk of suffering an electric shock when handling the sample clamp.

- Never tamper with the sample clamp.



Warning! Risk of hand injury!

Springs are used to keep the sample clamp in position. However, the clamp may fold down unexpectedly. If your hand is caught underneath the clamp, this may cause injuries.

- Never place your hand under the sample clamp.

2.3.8 Gas supply



Information! Measurement errors!

Impurities in the argon supply cause measuring errors.

- Ensure the installation of the argon supply line is free of oil and grease.

Only argon must be used when operating the instrument.

Argon quality (min.)	4.8 (99.998% Ar) with O_2<3ppm, N_2<10ppm, H_2O<5ppm, kV<1ppm Argon of higher purity or gas pre-purification is required for a nitrogen/oxygen analysis.

The spectrometer requires an argon supply line.

A suitable pressure reducer is required for the argon supply (bottles or liquid gas tank).

- Adjustable output pressure 0 - 10 bar
- The argon inlet pressure at the instrument is 4.8 – 5.0 bar (69.6 – 72.5 psi)

2.4 Prohibited operating conditions

Do not operate the instrument if one of the following conditions exists:

- If the instrument is faulty or damaged.
- If the ambient conditions do not comply with the specification.
- If the area where the instrument is used is not a commercial/industrial premise.

2.5 Misuse

Operating the instrument with components, accessories, parameters, materials, and operating resources other than those specified by the manufacturer is considered misuse of the instrument. Other cases of misuse are:

- Unauthorized modification or conversion of the instrument and its safety devices without complying with the applicable rules and regulations.
- Bypassing or deactivating safety and protective devices.
- Improper use of accessories or peripheral devices linked to the instrument.
- Replacing the detachable power cables with inadequately dimensioned power cables.

2.6 Residual risks

This instrument has been manufactured in accordance with the latest state-of-the-art technology. However, residual risks cannot be excluded entirely.



General warning sign!

- The light inlet window of the air optics is located at side of the spark stand.
  - ➔ Protective gloves must be worn to prevent cuts and contact with metal condensate, which can be toxic, depending on the sparked material.
- The instrument is operated with argon. Argon is heavier than air. It can accumulate in a closed room, especially on the floor or lower-lying areas.
  - ➔ Ensure that adequate ventilation is provided. If necessary, oxygen sensors must be installed.



Warning! High voltage!

When the instrument is switched on, there is a risk of an electric shock when the electrode is touched or when the sample is removed during a measurement.

- Never touch the sample while a measurement is in progress.
- Avoid any contact with the electrode if the excitation is activated (plasma generator).
- Higher electrical voltages occur inside the spectrometer.
  - ➔ Shut down the plasma generator when working on the spark stand.
- Shut down the instrument immediately if it is damaged.
- Never tamper with the safety devices! If it is suspected that a safety device does not work properly, shut down the instrument immediately!



Warning! Hot surface!

- Contacting the electrode increases the risk of burn injuries. During normal operation, the electrode will heat up to several hundred degrees.
  - ➔ Never touch the electrode with your bare hands, even after shutting down the spectrometer. Always use pliers.
- A sample can get hot if it is measured several times.
  - ➔ Touch the sample only after it has sufficiently cooled.



Warning! Risk of laceration!

- There are sharp edges on the protective cover which may cause injuries. The protective cover is electrically connected to the complete enclosure using EMC springs. These EMC springs have sharp edges.
  - ➔ Use protective gloves in order to avoid lacerations.



Warning! Risk of suffocation!

- The instrument is operated with argon. Argon is heavier than air. It can accumulate in a closed room, especially on the floor or lower-lying areas.
  - ➔ Ensure that adequate ventilation is provided. If necessary, oxygen sensors must be installed.

Information

- Compliance with the applicable occupational health and safety regulations at the workplace and the samples used (hazardous substances) is mandatory.
- Compliance with the safety data sheets of the hazardous substances is mandatory.

Information

In order to ensure the availability and operational safety of the equipment, we recommend having the system checked for correct operation and performance at least once a year by specialized technicians. Addresses of service organizations authorized by SPECTRO can be found at www.spectro.com.

Information

A high-voltage pulse ignites the plasma. Subsequently, the burning voltage is applied to the electrode.

When the instrument is switched on, there is an inherent danger of an electrical emission during a spark test, especially if the sample is removed during the measuring process.

- ➔ For a healthy person, this electrical transmission is of no concern. These are electromagnetic fields of low intensity. Due to this transmission, the electromagnetic characteristics of the instrument may be outside the limits of EN61326-1 in some areas. As a result, interferences of radio transmissions can occur in the immediate (close) range of the spectrometer. This means, for example, interference during the reception of radio transmissions is possible (crackling, image disturbances).
- ➔ Users of life-sustaining or supporting medical devices (e.g., insulin pumps, pacemakers, defibrillators, EEG, ECG devices, etc.) should not be affected by CE-compliant instruments. For this group of operators, however, it is strongly recommended to contact the manufacturer of the instrument before using the spectrometer!

3 Technical data

Description	Value
Instrument height	Benchtop instrument: 450 mm; 17.7"
	Floor instrument: 1350 mm; 53.1"
Instrument width	Benchtop instrument: 660 mm; 26"
	Floor instrument: 660 mm; 26"
Instrument depth	Benchtop instrument: 790 mm; 31.1"
	Floor instrument: 790 mm; 31.1"
Instrument weight	Benchtop instrument: approx. 74 kg; ~ 163 lbs
	Floor instrument: approx. 125 kg; ~ 276 lbs
Power supply	90 - 253 VAC, 50/60 Hz
Power during measurement	600 VA
Power during stand-by	180 VA
Supply voltage fuse	16 A (B)
Operating range (permissible ambient temperature)	10°C – 30°C; 50°F – 86°F
Recommended temperature range to achieve the specified performance	18°C – 28°C; 64°F – 82°F
Place of installation	Inside of dry, dust-free rooms up to an altitude of 2000 m above sea level, vibration-free (not subject to impact or vibration load conditions)
Air humidity range	20 – 80%, not condensing
Sound pressure level	55 dB(A)

Description	Value
Argon inlet pressure on the instrument	4.8 to 5.0 bar (69.6 to 72.5 psi)
Argon quality (min.)	4.8 (99.998% Ar) with O_2<3 ppm, N_2<10 ppm, H_2O <5 ppm, kV<1 ppm Argon of higher purity or gas pre-purification is required for a nitrogen/oxygen analysis.
Argon flow rates	Constant flow 9 l/h Analytic flow 200 l/h
Storage conditions	Ambient temperature -15°C – 45°C; +5°F – +113°F
Protection class / Contamination class	IP 20 (DIN 60529), contamination class II (laboratory environment)
EMC environment	Industrial environment / Laboratory environment

4 Transportation/Setting-up

Notice! Damage to instrument!

Improper transport may cause damage to the instrument or to other property within the surroundings.

- Only specifically trained personnel shall be permitted to transport the instrument in its transport packaging.
  - ➔ The properly trained employees have the corresponding instructions at their disposal.
  - ➔ If the usage site must be changed, please contact our Service Center.
- Consider the dimensions and the weight of the instrument.
  - ➔ Ensure that the transportation route is free of obstacles and bottlenecks are avoided.
  - ➔ Ensure that the static properties of the transport route and the installation location correspond to the weight of the unit (approx. 74 kg for the benchtop or 125 kg for the floor instrument).
- Only service personnel authorized by the manufacturer are permitted to unpack, install, set up, and connect the instrument.

Information: Measurement errors!

- If the instrument is subject to vibrations and shocks, measurement errors may occur during the measuring process.
  - ➔ The instrument must be installed at a vibration- and shock-free location.
- Measurement errors can result from temperature differences inside the instrument.
  - ➔ The instrument must be installed at a location, where it cannot heat up or cool down on one side only.
- The instrument must be operated only in a dry environment (protection class IP 20, DIN EN 60529).

Observe the following information regarding the instrument's installation:

- All connections are located at the rear side.
- The instrument must be accessible from all sides for maintenance. Set up the instrument accordingly. Sufficient space should be provided for the computer workstation (keyboard, monitor, printer) and the operating personnel.
- The clearance to other objects should be at least 10 cm on all sides. In addition to the space required by the instrument, some space is needed for the gas supply, unless fixed gas connections are available.
- In order to disconnect the instrument from the power supply, access to the main switch of the instrument must be ensured at all times.

4.1 Space requirements

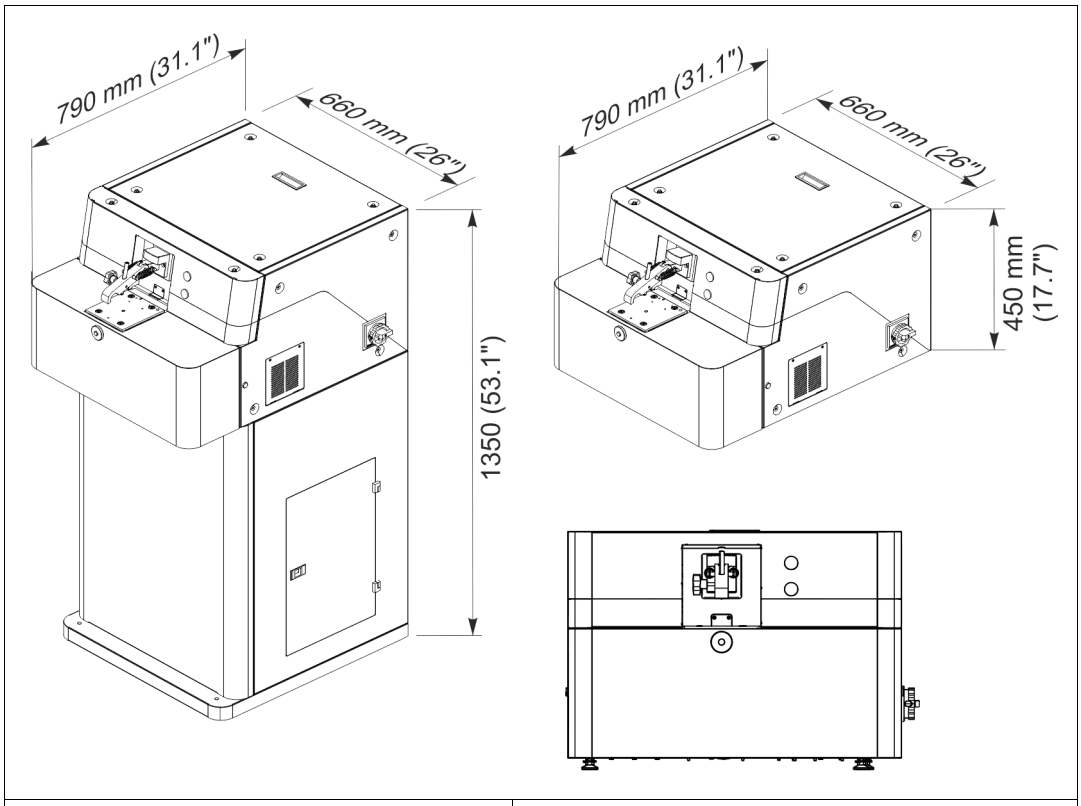

Floor instrument	Benchtop instrument

Fig. 7

4.2 Storage

Storage conditions:

- The instrument must be stored in a dry place
- Room temperature -15°C – +45°C (5°F – 113°F)

4.3 Gas supply

Information: Measurement errors!

Impurities in the argon supply cause measuring errors.

- Ensure the installation of the argon supply line is free of oil and grease.

The spectrometer requires an argon supply line.

A suitable pressure reducer is required for the argon supply (bottles or liquid gas tank).

- Adjustable output pressure 0 - 10 bar
- The argon inlet pressure at the instrument is 4.8 – 5 bar (69.6 - 72.5 psi)
- The pressure reducer must be adjusted so that the maximum permissible inlet pressure of the instrument is not exceeded.

A copper tube for the argon supply is provided with the delivery of the SPECTRO:

- Diameter 6 x 1 mm, length 3 m

  ➔ When using longer lines and/or smaller tube diameters, a possible pressure drop must be taken into account.

This line is screwed to the connection on the rear panel of the instrument. The threaded connection is included in the scope of supply.

5 Initial start-up

5.1 Preparing the instrument for use

Before switching on the instrument, proceed as follows:

1. Check the filling level of the gas-washing bottle. Fill with water if required, see page 50.
2. Set the argon pressure to 4.8 - 5.0 bar (69.6 - 72.5 psi).
   - ➔ If the argon pressure is not properly set, turbulences result in the spark stand insert. Thus, correct measuring results cannot be obtained.

✓ The instrument is ready for use.

6 Operation

6.1 Overview of controls

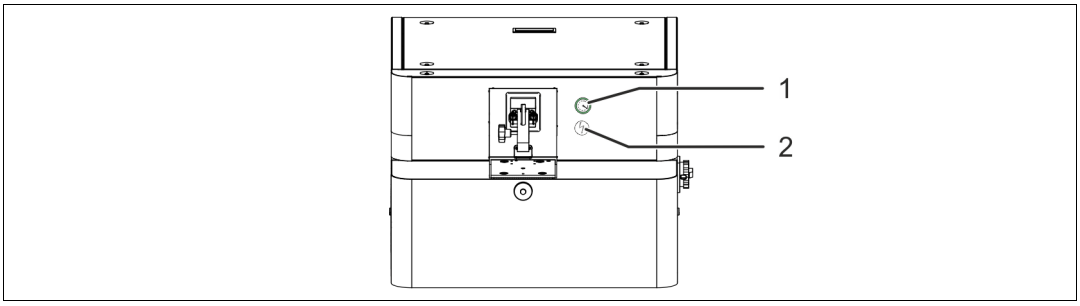

Fig. 8

No.	Control element	Function
1	Switch	Start/Stop measurement
2	Switch	Switches the plasma generator on/off, see chapter 6.2.

6.2 Switching on the instrument

Caution! Damage to the instrument!

Only use power cables that are rated for the currents of the instrument.

Information

To operate the instrument in compliance with the specification, it should be stabilized for at least 2 hours after it has been switched on.

This may take longer because this procedure is dependent on the temperature during instrument transport and/or storage.

Before proceeding with any other activities, ensure that the operating temperature of the optical room of 33 °C (91.5 °F) has been reached (see chapter **9.2**).

To switch on the instrument, proceed as follows:

1. Connect the instrument to the power supply.
2. Turn the main switch to the “ON” position.
3. In order to switch on the plasma generator, press the following buttons:



4. Switch on the computer.
   ➔ The operating system is booted.
5. After booting the operating system, start the “Spark Analyzer Pro (MAXx)” spectrometer software.

✓ The instrument is switched on.

6.2.1 Argon saving module

The argon flow is deactivated by switching off the Plasma generator. This minimizes the overall argon consumption.

For restoring the readiness for measurements, flushing with the analytic flow is carried out.

When the argon flow is automatically activated again is determined in the "Argon saving module" screen dialog. Immediately thereafter, the instrument is ready for operation.

For a detailed description, refer to the online help of the instrument.

6.3 Switching off the instrument

Information

If the instrument was completely switched off, restarting may take some time as the optics need to reach the right temperature and the system must be flushed with argon.

It is recommended to leave the instrument connected to the power supply and to leave the argon supply line open all the time.

To switch off the instrument, proceed as follows:

1. Turn off the plasma generator by pressing the  switch.
2. Exit the spectrometer program "Spark Analyzer Pro (MAXx)".
3. Select the dialog item "Shut down" and confirm the dialog field.
   - ➔ The program is shut down.
   - ➔ The computer is turned off.
4. In order to switch off the instrument completely, set the main switch to the OFF position.

✓ The instrument is switched off.

6.4 Measuring procedure



Warning of hand injury!

Springs are used to keep the sample clamp in position. However, the clamp may fold down unexpectedly. If your hand is caught underneath the clamp, this may cause injuries.

- Never place your hand under the sample clamp.



Warning of hazardous voltage!

The sample clamp provides the contact between the sample and the spark stand. There is a risk of electric shock when handling the sample clamp.

- Never tamper with the sample clamp.



Warning! Hot surface!

A sample can get hot if it is measured several times.

- Touch the sample only after it has sufficiently cooled.



Warning! Optical radiation!

The plasma in the spark stand generates UV radiation. UV radiation may cause damage to the eyes or skin.

- For samples that do not completely cover the spark stand opening, use the respective sample adapters in such a way that the opening is completely closed.
- Take appropriate protective measures (e.g. wear safety goggles) when the spark stand opening is not fully covered.



Information

A flawed initial start-up, operation or sample preparation can lead to measurement errors.

- Therefore, ensure all necessary requirements for a correct measurement are met.

6.4.1 Preparing the measuring procedure



Information

An optimum measurement requires a good argon atmosphere inside the spark stand. Therefore, the opening of the spark stand must always be covered. This will make it more difficult for ambient air to enter the spark stand. A flat sample is highly recommended.

Oxygen and humid air inside the spark stand may result in poor burn spots (see Chapter 9 „Troubleshooting“).

In order to remove any oxygen that may have penetrated from the spark stand, use the “Flush” button on the computer to invoke the flush function.

Before starting the measurement, proceed as follows:

1. Ensure that
   - ➔ the instrument is ICALized, see page 34,
   - ➔ the correct and base-relevant parts have been installed, see page 35.
2. Check the spark stand and the sample for any moisture.
   - ➔ It is important that no moisture is visible on the outside.
   - ➔ If necessary, dry the sample.
3. If working with toxic samples, ensure to verify the safety precautions.

✓ The measurement is now prepared.

6.4.2 iCALising the measuring device (iCAL)

The iCALising procedure (standardizing using iCal) requires a reference sample. The average values of these measurement results are calculated and stored in the instrument.

In order to proceed with iCALization, follow the steps below:

1. Place a clean electrode in the spark stand, see page 45 ff.
2. Start the iCAL function by pressing the “iCAL” button.
3. Follow the instructions on the screen and perform the necessary measurements with the reference sample.
4. Poor measurements are highlighted in the ICAL measurement window and can be deleted. Please repeat the respective measurements.

✓ The instrument is iCALized.

6.4.3 Changing the base (multi-base instruments only)

When changing the base, the spark stand must be cleaned in order to avoid memory effects, see page 43.

- Change the spark stand insert, the electrode, and the electrode brush.

Preparation of the instrument for measuring another base is now complete.

6.4.4 Start the measurement



Information

Use the electrode brush in order clean the electrode tip after each measurement.

To measure the probe, proceed as follows:

1. Start the required measuring program using function key F10.
2. Put the sample in position.
   - ➔ The sample must fully cover the opening in the spark stand plate.
   - ➔ The sample clamp must have contact with the sample (the function circuit of the spark stand is closed).
3. Use the function key F2 or the start/stop button to start the process.
   - ➔ The measurement is fully automated.
   - ➔ The measurement is finished automatically.
   - ➔ The measurement results are displayed on the screen.
4. Perform further measurements as needed.
   - ➔ Use the electrode brush in order clean the electrode tip after each measurement.
   - ➔ Rotate the sample slightly for each further measurement. The respective burn spots must not overlap.
5. Use "Start" or press the respective function key to start the series of measurement.

✓ The measurement process is finished.

7 Maintenance

Information

In order to ensure the availability and operational safety of the equipment, we recommend having the system checked for correct operation and performance at least once per year by specialized technicians. To find contact addresses of service organizations authorized by SPECTRO go to www.spectro.com

7.1 Maintenance Reminder

The instrument is equipped with a diagnostic system that will prompt you to proceed with a variety of maintenance tasks. The intervals between the individual maintenance tasks are based on certain periods and/or the number of measurements taken during normal use of the instrument. If the instrument is used very little or intensively, the respective defaults should be adjusted accordingly. The following maintenance intervals are monitored.

- General maintenance
- iCALization
- Spark stand cleaning
- Argon exhaust service
- Air filter service

7.2 Maintenance schedule

Start of work	Tasks to be performed
1. Check the argon supply.	The min. pressure in the bottle is 10 bar.
2. Diagnosis system - maintenance or check the number of measurements.	Will be specified by the diagnosis system.
3. Check the water level in the gas-washing bottle.	Top up/replace, see page 50.
4. Check the burn spot.	Visual inspection.

Measuring procedure	Tasks to be performed
Clean the electrode.	Use the small wire brush to clean the electrode after each spark test.

Monthly maintenance tasks	
Change water in gas-washing bottle.	See page 50.
Clean the air optics light inlet window.	See page 39.
Clean the filter mats and replace if necessary.	See page 52.

As required	
iCALizing the measuring device (iCAL)	See page 34.
Replacing the iCALization sample.	See page 54
Clean spark stand.	See page 43.
Clean/replace the filter insert of the filter bottle.	See page 48.
Replace the filter bottle.	As required.

7.3 Cleaning the UV optics light inlet window



Warning! High voltage!

When the plasma generator is switched on, there is a risk of electric shock if the electrode is touched.

- Shut down the plasma generator when working on the spark stand.



Warning! Toxic substances!

When removing the light entry window, contact with the condensate of the samples is likely. Depending on the sample material, the condensate may be toxic.

- Protective gloves must be worn.



Warning! Risk of laceration!

- There are sharp edges on the protective cover which may cause injuries. The protective cover is electrically connected to the complete enclosure using EMC springs. These EMC springs have sharp edges.
  - ➔ Use protective gloves in order to avoid .

To clean the light inlet window, proceed as follows:

1. Turn off the plasma generator (1).
2. Unscrew the 4 fasteners (2) and remove the spark stand plate (3).

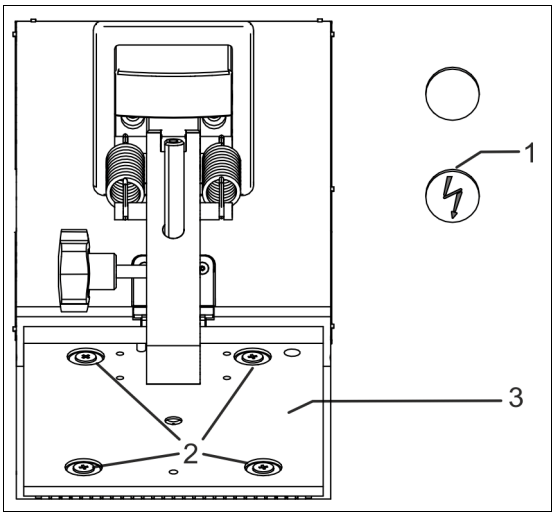

Fig. 9

3. Remove the spacer (1) from the spark stand.

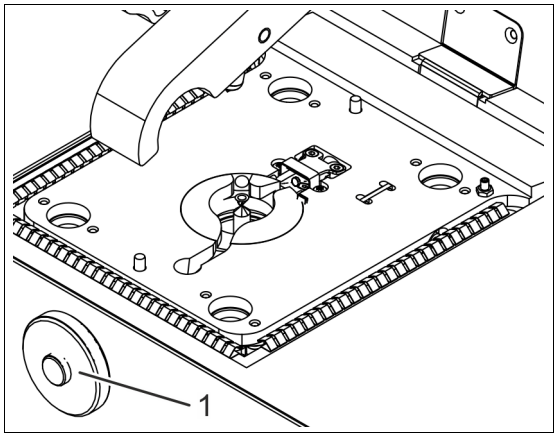

Fig. 10

4. Unlock the protective cover (1) by pressing both buttons (2) simultaneously.
5. Remove the protective cover (1).

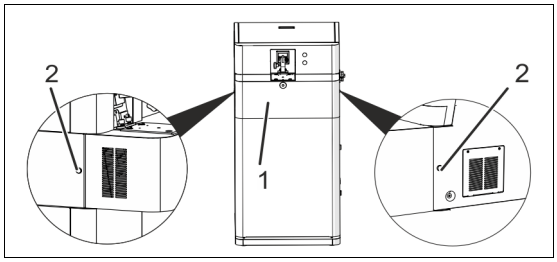

Fig. 11

6. Loosen the union nut (1).

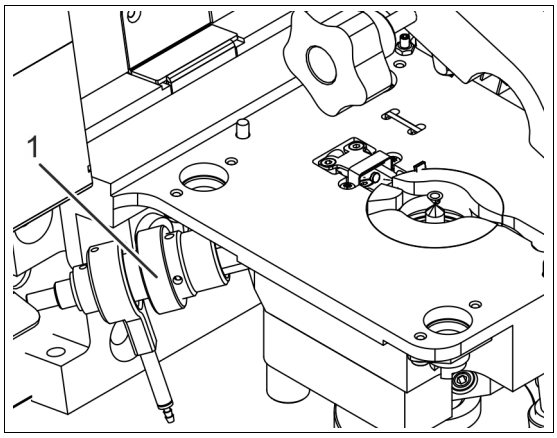

Fig. 12

7. Remove the fiber optic holder (1) from the spark stand.
8. Loosen the window holder (2) from the spark stand.
   ➔ The quartz window is located between the holder and the O-ring.

   Direct contact with the optical surfaces must be avoided!

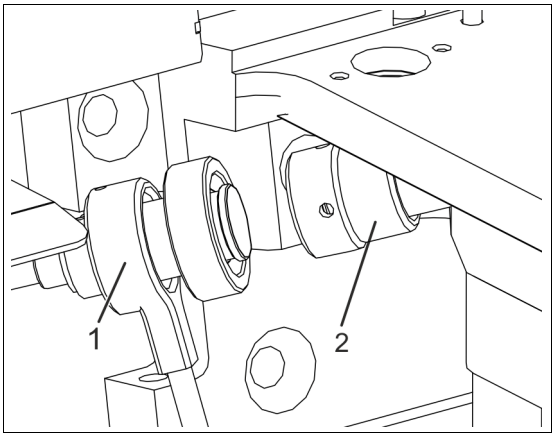

Fig. 13

9. Clean the light inlet window (1), using optical paper or a lint-free soft cloth.
   ➔ If the light inlet window is too dirty, it must be replaced.

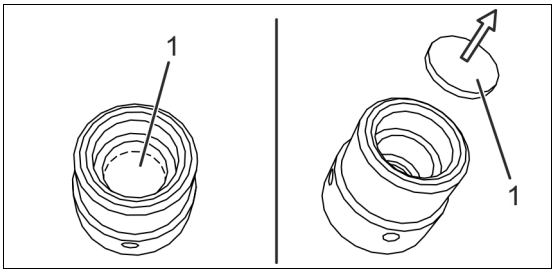

Fig. 14

10. Clean the light channel (1) with a grease-free cloth or a bottle brush with plastic bristles.

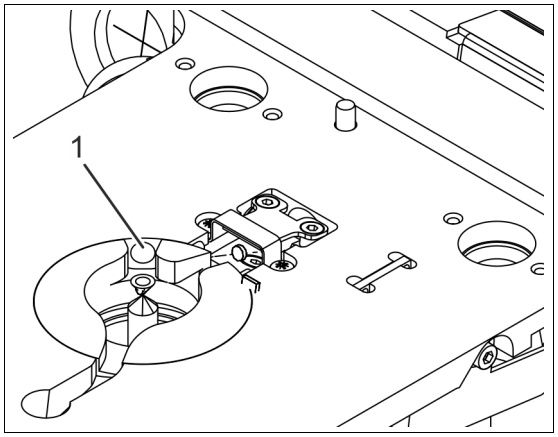

Fig. 15

11. If necessary, use a grease-free cloth to clean the O-ring (1).

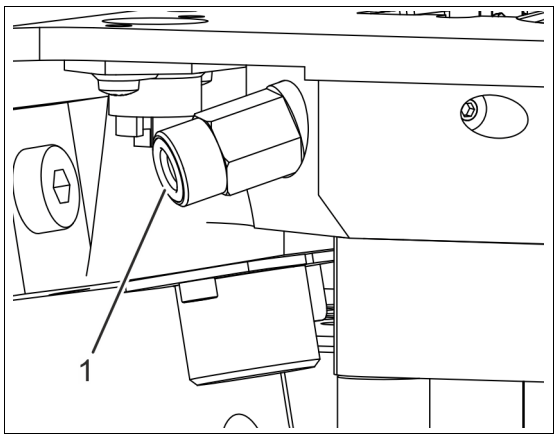

Fig. 16

12. Reassemble components in reverse order.

✓ Cleaning of the air optics light inlet window is now complete.

7.4 Cleaning the spark stand



Warning! High voltage!

When the plasma generator is switched on, there is a risk of electric shock if the electrode is touched.

- Shut down the plasma generator when working on the spark stand.



Warning! Toxic substances!

The sparking process produces a black precipitate (metal condensate). The condensate could be toxic or flammable, depending on the sample material.

- Protective gloves and safety goggles must always be worn when cleaning the spark stand and when cleaning the gas-washing bottle or the filter bottle. This also applies when replacing the filter insert. If metals with toxic components have been sparked off, wearing a breathing mask to prevent the inhalation of condensate particles is mandatory.
- When disposing of the condensate, compliance with legal regulations is mandatory.



Warning! Hot surface!

Contacting the electrode increases the risk of burn injuries. During normal operation, the electrode will heat up to several hundred degrees.

- Never touch the electrode with your bare hands, even after shutting down the spectrometer. Always use pliers.



Warning! Risk of laceration!

- There are sharp edges on the protective cover which may cause injuries. The protective cover is electrically connected to the complete enclosure using EMC springs. These EMC springs have sharp edges.
  ➔ Use protective gloves in order to avoid lacerations.



Warning! Flammable substances!

- Do not vacuum the spark stand. The condensate could ignite an unsuitable vacuum cleaner.
- The exhaust filter of the vacuum cleaner may not be suitable for the pore size of the condensate.

Notice! Instrument damaged or malfunction!

Incorrect cleaning of the spark stand increases the risk of damage to the instrument or malfunctions during measurements.
Please observe the following rules during cleaning:

- Only use a clean, dry and soft cloth to clean the spark stand.
- To clean holes in the spark stand, also use a clean, dry and soft cloth or a bottle brush with plastic bristles.
- Do not use solvents to clean the spark stand. Solvent residues can adversely affect the function of the spectrometer.
- Do not use compressed air (or similar methods) to clean the spark stand. The use of compressed air could cause the condensate to ignite and/or spread inside the laboratory.
- Do not vacuum the spark stand. The condensate could ignite an unsuitable vacuum cleaner. The exhaust filter of the vacuum cleaner may not be suitable for the pore size of the condensate.

The sparking process soils the spark stand with a black precipitate (metal condensate). This metal condensate may create a conductive connection between the electrode and the metal structure of the spark stand wall.

To clean the spark stand, proceed as follows:

1. Turn off the plasma generator (1).
2. Unscrew the 4 fasteners (2) and remove the spark stand plate (3).

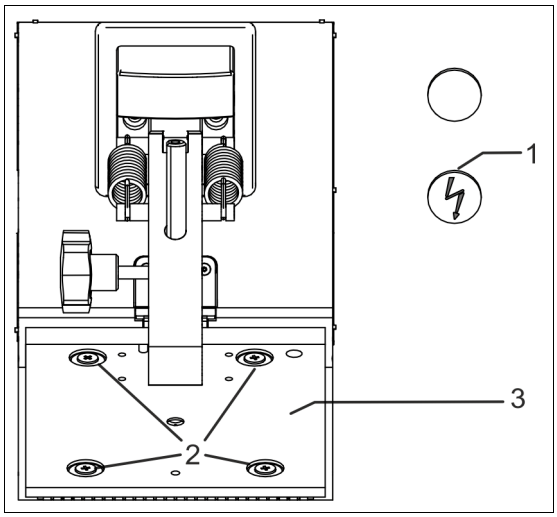

Fig. 17

3. Use a dry, grease-free cloth to clean both sides of the spark stand plate (1).
4. Remove and clean the O-ring (2) of the spark stand plate.

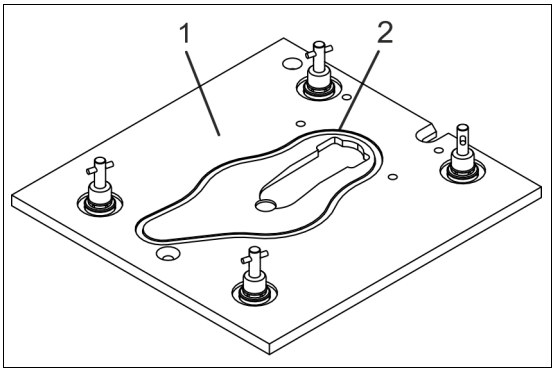

Fig. 18

5. In order to remove the electrode (1), unscrew the spacer (2). Behind the plug there is a through hole in order to reach the fixing screw of the electrode.

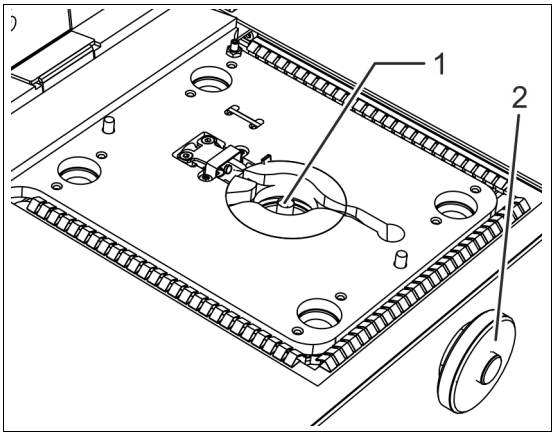

Fig. 19

6. Loosen the fixing screw of the electrode (1), using the Allen key (AF 2.5) until the electrode can be removed.
   - ➔ When loosening the electrode, hold firmly on to it. After loosening the screw, a spring presses the screw upward. Loosen the screw only until the electrode can be removed easily.
7. Remove and clean the electrode.
   - ➔ If the electrode is worn, it must be replaced.

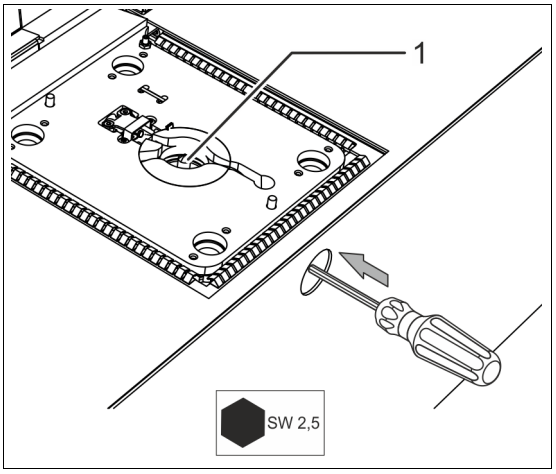

Fig. 20

8. Remove the spark stand insert (1). Use a dry, grease-free cloth to clean the insert.

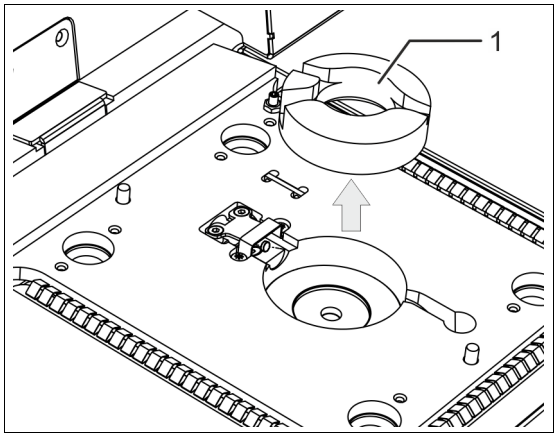

Fig. 21

9. Use a dry, grease-free cloth to clean the surface of the spark stand body.
10. Use a dry, grease-free cloth or a bottle brush with plastic bristles to clean the light channel (1).

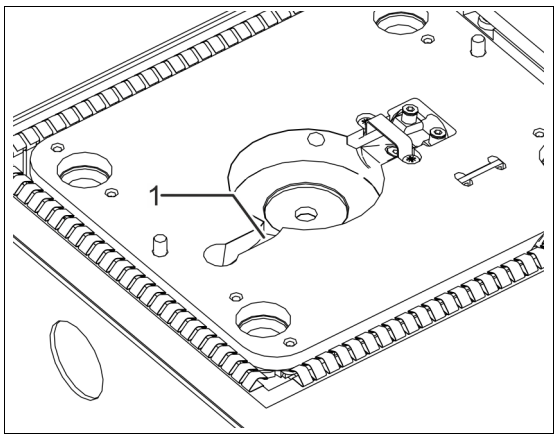

Fig. 22

11. Install the spark stand insert (1).
    - ➔ Use two fitted pins (3) in order to center the spark stand insert.
    - ➔ Ensure that the spark stand insert is flush with the top edge (2) of the spark stand.

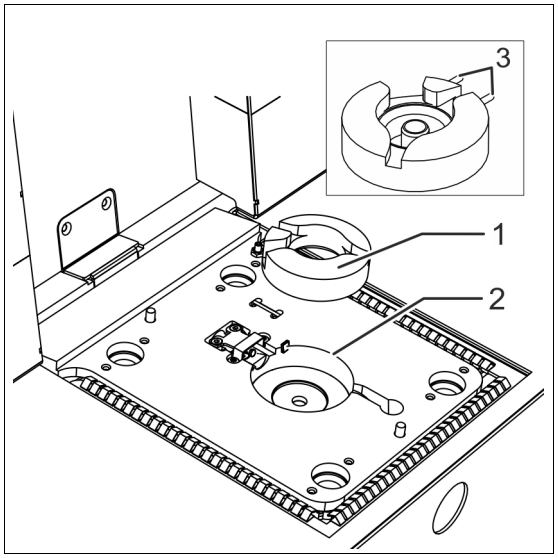

Fig. 23

12. Install the spark stand plate (1).
13. Insert the electrode (2) into the spark stand opening.

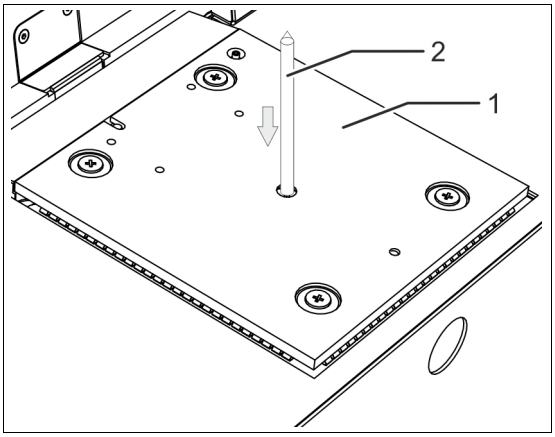

Fig. 24

14. Use the setting gage (1) in order to align the electrode.
    - ➔ Press the setting gage with the 3.4 mm shoulder into the spark stand opening and at the same time use the Allen key (AF 2.5) to tighten the electrode screw.

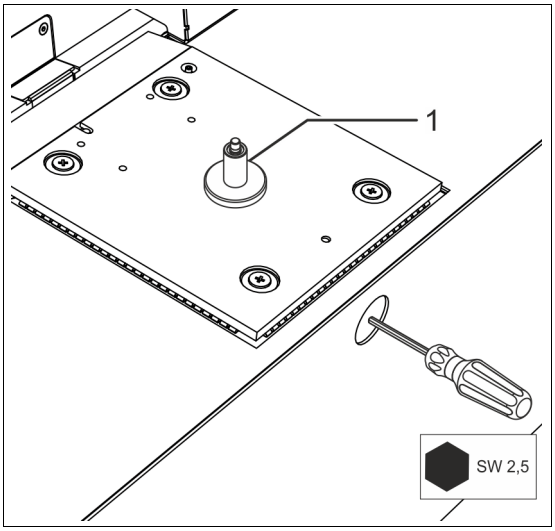

Fig. 25

15. Screw the setting gage (1) back into the spark stand.

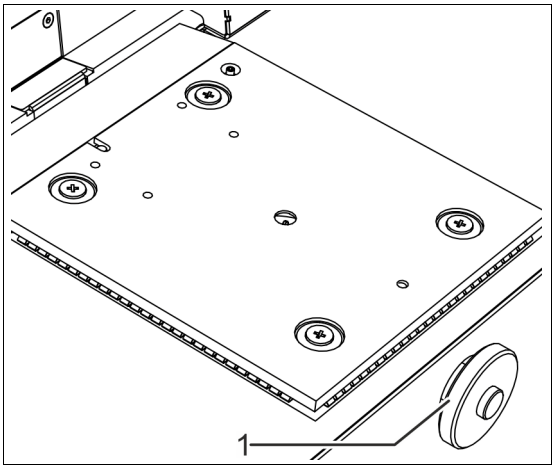

Fig. 26

✓ The spark stand is now cleaned.

7.5 Exhaust filter system - Change filter insert



Warning! Toxic or flammable substances!

The sparking process produces a black precipitate (metal condensate). The condensate could be toxic or flammable, depending on the sample material.

- Protective gloves and safety goggles must always be worn when cleaning the spark stand and when cleaning the gas-washing bottle or the filter bottle. This also applies when replacing the filter insert. If metals with toxic components have been sparked off, wearing a breathing mask to prevent inhalation of condensate particles is advisable.
- When disposing of the condensate and the used filters, compliance with legal regulations is mandatory.

To replace the filter cartridge, proceed as follows:

1. **Floor instrument:**

   Open the door on the right side of the instrument.

   Benchtop instrument:

   Turn the opening of the filter cartridge container to the front.
2. Hold the filter cartridge (1) with both hands and unscrew it.
3. Remove the filter insert (2).

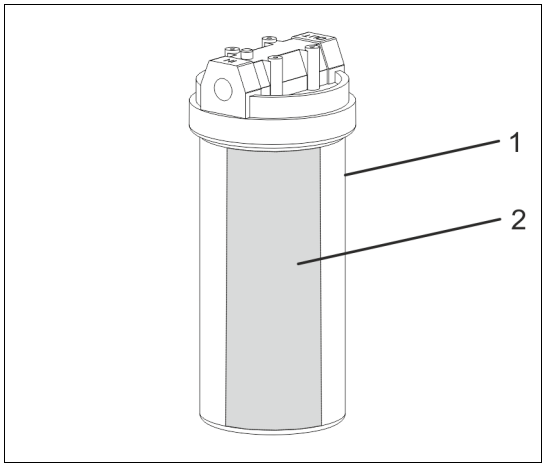

Fig. 27

4. Insert the new filter and screw the filter container back into the holder.
   - Ensure that the O-ring (1) is clean and sits inside the groove. If necessary, use a clean cloth to clean the O-ring.
   - The filter container should only be tightened by hand.
   - The filter bottle screws in easily. If not, the filter insert is not positioned correctly.

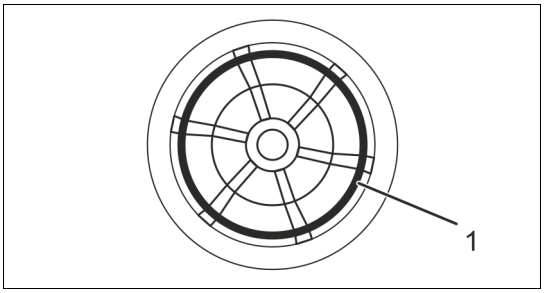

Fig. 28

✓ Now, the filter cartridge is replaced.

7.6 Exhaust filter system - Inspecting the gas-washing bottle



Warning! Toxic or flammable substances!

The sparking process produces a black precipitate (metal condensate). The condensate could be toxic or flammable, depending on the sample material.

- Protective gloves and safety goggles must always be worn when cleaning the spark stand and when cleaning the gas-washing bottle or the filter bottle. This also applies when replacing the filter insert.
- When disposing of the condensate and the used filters, compliance with legal regulations is mandatory.

In order to inspect the gas-washing bottle, proceed as follows:

1. **Floor instrument**:

   Open the right door of the instrument.

   Benchtop instrument:

   Turn the opening of the filter cartridge container to the front.

2. Check the water level inside the filter cartridge.

   ➔ The gas-washing bottle must be filled half with water (see marking on the gas-washing bottle).

   ➔ The water must be clean.

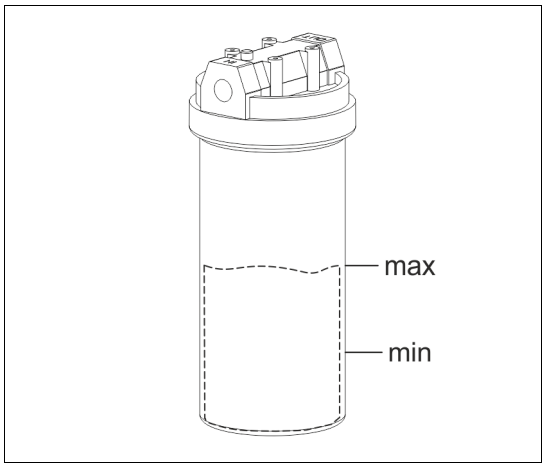

Fig. 29

3. In order to refill water, use both hands to hold the filter cartridge and unscrew it.
4. Refill water or change it as required.

5. Make sure that the O-ring (1) sits in the groove and is clean. If necessary, use a clean cloth to clean the O-ring.
6. Screw the gas-washing bottle back manually.

✓ The water is checked/changed.

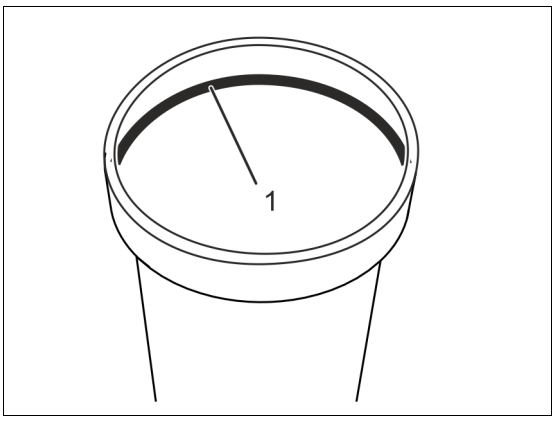

Fig. 30

7.7 Replacing the filter mats

7.7.1 Housing of air filter

The air filter's housing is located on the right-hand side of the instrument. To replace the filter mat, proceed as follows:

1. Remove both fixing screws of the applicable filter retainer bracket (1).
2. Remove the protective cover (2).

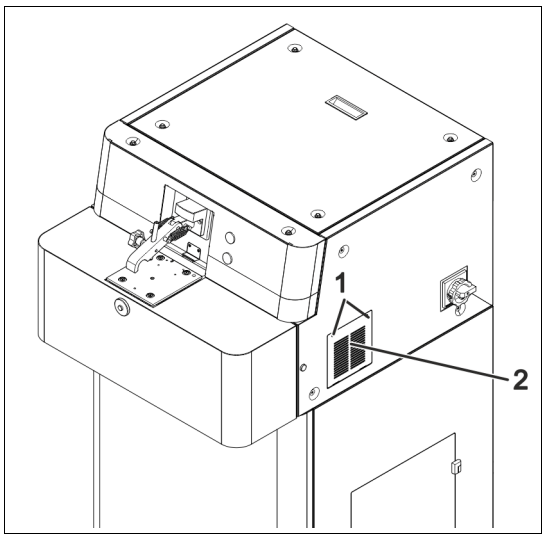

Fig. 31

3. Remove the filter mat (1).

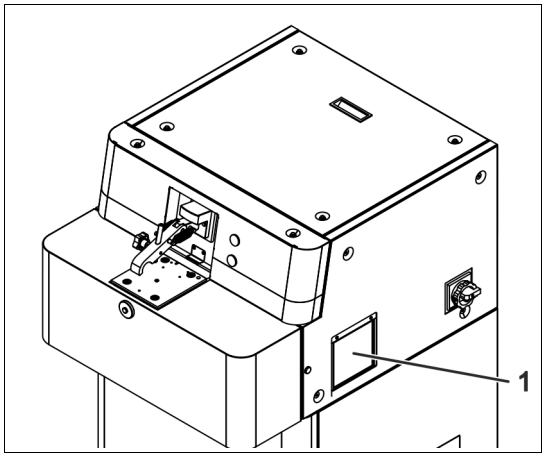

Fig. 32

4. Install the new filter mat.
5. Reinstall the cover.

✓ The housing of the air filter is replaced.

7.7.2 Optic air filter

The filter mat of the optic air filter is located on the left-hand side panel of the instrument.

In order to clean or replace the air filter mat, proceed as follows:

1. Loosen the two cross-head screw (1).
2. Remove the cover (2).

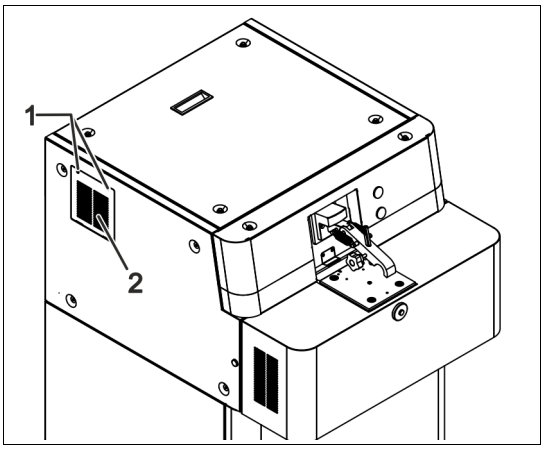

Fig. 33

3. Remove the filter mat (1).

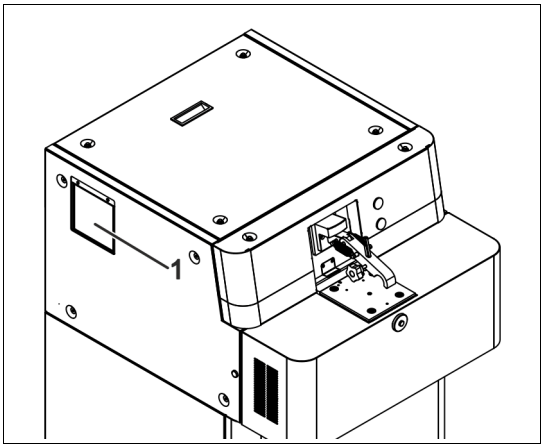

Fig. 34

4. Install the new filter mat.
5. Tighten the screws.
6. Install the cover.

✓ The optic air filter is cleaned / replaced.

7.8 Replacing the ICALization sample

Whenever the iCALization sample is almost used up, a replacement must be procured.

The composition of the new iCALization sample is different from that of the original sample. The intensities of the new sample must be matched to those of the old sample.

Please contact your Service Center.

7.9 Cleaning agents

Information on cleaning and decontamination

- Before using any cleaning or decontamination procedure other than the procedure specified by the manufacturer, the operating company of the instrument must check with the manufacturer that the intended method will not damage the instrument.
- The company is responsible for the proper implementation of decontamination procedure if a hazardous substance has been spilled on or into the instrument.

Unless otherwise stated in the respective instructions, the cleaning agents listed here are preferred for cleaning purposes.

Components	Cleaning agents
Housing	A damp cloth and a mild detergent, isopropanol
Spark stand	Only use a clean, dry and soft cloth to clean the spark stand.

8 Status messages

The status information is displayed in the footer of the software. These indications provide important information about the status of the instrument.

The following information is available:

Status information	Description
Ready	The instrument is ready for measurement if all specifications according to chapter 6.4.1 "Preparing the measuring procedure" on page 34. have been met.
Optic room's temperature	Is shown in red as soon as the temperature of the instrument is outside the optic's room temperature range.
Sample Clamp up	The sample clamp is not folded down or a conductive contact with the sample has not been established.
Safety check required	The functional circuit between the sample and the spark stand is tested. Briefly lift sample clamp in order to interrupt the contact to the sample.

9 Troubleshooting

Malfunction	Cause	Remedy
The instrument cannot be switched on.	The power plug is not plugged in properly.	Check if the power plug was properly plugged in.
	Power is not available.	Check the power supply.
	Main switch on OFF position.	Turn the main switch to the “ON” position.
No proper burn spot.	The argon outlet (exhaust) is clogged with condensate.	Clean the spark stand including the argon outlet.
	Insufficient argon supply.	Check argon supply and pressure.
	Poor argon quality.	Connect new argon; specifications, see page 25
	Incorrect electrode gap.	Clean the electrode and re-adjust the gap using the spacer.
	Plasma generator faulty.	Please contact your Service Center.
	The samples have not been prepared properly. The sample surface is not flat enough.	Prepare sample properly, (grind, turn or mill).

Malfunction	Cause	Remedy
Low intensities in UV optics.	Light entrance lens is soiled.	Please contact your Service Center.
	Shutter blocked.	Check shutter function, call the Service Center if required
	Low transmission.	Use argon to rinse the optics (function “Rinse” or the corresponding function key)
Low intensities in the air optics.	Light inlet window soiled.	Clean light inlet window if required, see page 39.
Limit values are not maintained during iCALization.	Insufficient light intensity.	1. Check argon. 2. Check sample. 3. Clean spark stand, adjust electrode. 4. Clean light inlet window. 5. ICALize the instrument again and, if necessary, contact the Service Center.
	Light intensity too high.	1. Check the shutter function. 2. Check the plasma generator parameters, contact the Service Center if necessary.

9.1 Error messages

Error	Cause	Remedy
When starting the “Spark Analyzer Pro (MAXx)” software, the instrument switches into DEMO mode.	Communication	Exit the “Spark Analyzer Pro (MAXx)” software. Disconnect the spectrometer from the power for a short time. After a waiting period of approx. 60 sec., restart the “Spark Analyzer Pro (MAXx)” software.
	The connection between the PC and the spectrometer is interrupted.	Connect the spectrometer and the PC with the communication cable.
	Instrument without power.	Check the power supply.
Safety check is required.	Function circuit between sample and spark stand has not been activated within the last 5 minutes.	Confirm the message. Move the sample clamp up for approx. 1 second.
An error has occurred while accessing the spectrometer (plasma generator is switched off, measurement could not be started). Check the condition of the spectrometer.	Plasma generator is not switched on.	Switch on the Plasma generator. Confirm by pressing “OK”.
	Insufficient argon supply.	Check the argon supply: Pre-pressure (4.8 to 5.0 bar (69.6 to 72.5 psi)) and available quantity.
An error has occurred during spectrometer access (clamp up, measurement could not be started). Check the condition of the spectrometer.	The function circuit between sample and spark stand is not closed.	The function circuit "Clamp – Sample – Spark stand" is not closed. Ensure that electrical contact is made.

9.2 Diagnosis tool SPECTRO Spark Analyzer Pro MAXx

An LED symbol in the status bar permanently indicates the general status of the instrument.

To open the diagnostic system, click the green or red LED symbol in the lower right-hand corner of the status bar.

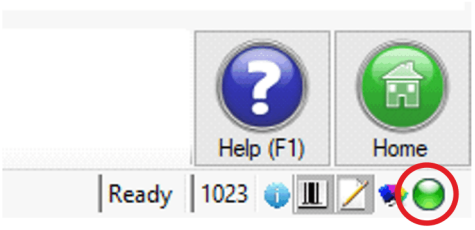

Fig. 35

When the instrument is ready for operation, the green LED symbol is lit. If an error occurs, the LED symbol changes to red. For a detailed description, refer to the online help of the instrument.

9.3 Diagnosis tool SPECTRO Spark Analyzer Pro



A flash symbol at the upper right edge of the monitor is used to indicate the general status of the instrument at all times.

Fig. 36

There is a red exclamation mark superimposed over the flash symbol if information is available as to why a measurement is hampered. For example:

- Optical system temperature not within the specified range
- System error messages

There is an orange exclamation mark superimposed over the flash symbol if information is available that a measurement is permitted but attention would be required. For example:

- Maintenance messages
- Non-optimum temperature of the optical system

Click the flash symbol at the upper right edge of the monitor to open the diagnostic system.

For a detailed description, refer to the online help of the instrument.

10 Spare parts and consumables

Spare parts and consumables for this device can be found under “Support – SPECTRO Webshop” on our homepage www.spectro.com.

Only original spare parts may be used to repair the device. The use of third-party parts will result in loss of CE conformity. An exception to this are spare parts from other manufacturers that have been approved by SPECTRO.

Use only genuine spare parts for repairing the instrument. The use of non-genuine spare parts will make the CE Declaration of Conformity null and void. Excepted are spare parts from manufacturers approved by SPECTRO.

11 De-commissioning

Only organizations or persons authorized by the instrument manufacturer shall be permitted to de-commission the instrument. Please contact your Service Center.

12 Manufacturer address

SPECTRO Analytical Instruments GmbH

Boschstr. 10

D-47533 Kleve

Germany

Tel.: +49.2821.8 92-0

Fax: +49.2821.8 92-22 00

www.spectro.com

Your local SPECTRO Organization or representative can be found under “Contact“ at www.spectro.com