# SPECTROGREEN
# FMX46/2020




## Optical emission spectrometer with inductively-coupled plasma excitation

Original operating instructions

SPECTRO

# Table of Contents


1 Description of instrument ..... 5
1.1 Description ..... 5
1.2 Function ..... 5
1.3 Overview ..... 6
1.3.1 Instrument ..... 6
1.3.2 Connections (left-hand side) ..... 7
1.3.3 Peristaltic pump ..... 7
1.3.4 Sample introduction system ..... 8
1.3.5 Plasma torch box ..... 9
2 Safety ..... 11
2.1 Symbols used ..... 11
2.2 User information ..... 12
2.3 Intended use ..... 13
2.4 Prohibited operating conditions ..... 14
2.5 Residual risks ..... 14
3 Technical data ..... 17
4 Transportation/Setting-up ..... 19
4.1 Space requirements ..... 20
4.2 Set-up ..... 20
4.3 Ambient temperature ..... 21
4.4 Dust load ..... 21
4.5 Storage ..... 22
4.6 Gas supply ..... 22
4.7 Exhaust air (to the outside) ..... 23
5 Operation ..... 25
5.1 Overview of controls ..... 25
5.2 Preparing the instrument for use ..... 25
5.3 Switch on the instrument, ready for operation, plasma start ..... 26
5.4 Switch off the instrument/plasma ..... 27
5.5 Carrying out the measurement ..... 29
5.5.1 Preparing the measuring procedure ..... 29
- Spectra calibration of the optical system ..... 29
- Calibrating a method ..... 31
5.5.2 Start the measurement ..... 32
6 Maintenance ..... 33
6.1 Maintenance schedule ..... 33
6.2 Cleaning the plasma torch ..... 35

6.3 Cleaning the nebulizer (standard Crossflow Nebulizer) ... 39
6.4 Cleaning the spray chamber (standard Scott Chamber) ... 40
6.5 Checking the aerosol formation of the nebulizer ... 41
6.6 Cleaning the load coil ... 42
6.7 Optimizing the nebulizer gas flow ... 42
6.8 Cleaning the Side-On Plasma Interface (SPI) ... 43
6.8.1 Removing the SPI ... 44
6.8.2 Cleaning the lens and the SPI ... 45
6.8.3 Installing the lens and the SPI ... 46
6.9 Cleaning the optical plasma interface (OPI) (EOP only) ... 47
6.9.1 Removing the OPI ... 47
6.9.2 Cleaning the sampler ... 48
6.9.3 Cleaning the lens ... 49
6.9.4 Installing the lens and the OPI ... 50
6.10 Cleaning of the fused silica window for radial observation of the Twin Interface ... 51
6.10.1 Removing the window ... 51
6.10.2 Fitting the window ... 52
6.11 Pump tubing maintenance ... 53
7 Troubleshooting ... 54
8 Spare parts and consumables ... 58
9 De-commissioning ... 58
10 Manufacturer address ... 58

# 1 Description of instrument

## 1.1 Description

| | |
|---|---|
| Instrument: | SPECTROGREEN FMX46 |
| Model: | FMX 46 / 2020 |
| Type/Part No.: | 76004566 |

## 1.2 Function

The SPECTROGREEN FMX46/2020 is an automatic optical emission spectrometer providing simultaneous measurements. It uses inductively-coupled plasma excitation and a semiconductor-based detector system for quantitative and semi-quantitative analysis of liquids.

The liquid sample is nebulized and fed into the plasma as an aerosol. The high temperature of the plasma (6,000 - 8,000 K) evaporates the sample. The molecules contained in the sample dissociate into atoms. The atoms are excited and partly ionized.

The excited atoms and ions emit an element-specific radiation. A transfer optics feeds this radiation into the optical system.

The emitted radiation is diffracted into its spectral components in the optical system. The intensity is measured using semiconductor detectors (CMOS).

After processing the measuring signals in the instrument, the measured element intensities are evaluated by ICP Analyzer-PRO software.

Methods are set up prior to measuring. Calibration functions for each element to be determined are stored in these methods. Concentrations are calculated from the measured intensities, using these methods. The concentrations are displayed on the screen. They are also printed on a printer (can be activated as required) or saved in a database.

## 1.3 Overview

### 1.3.1 Instrument

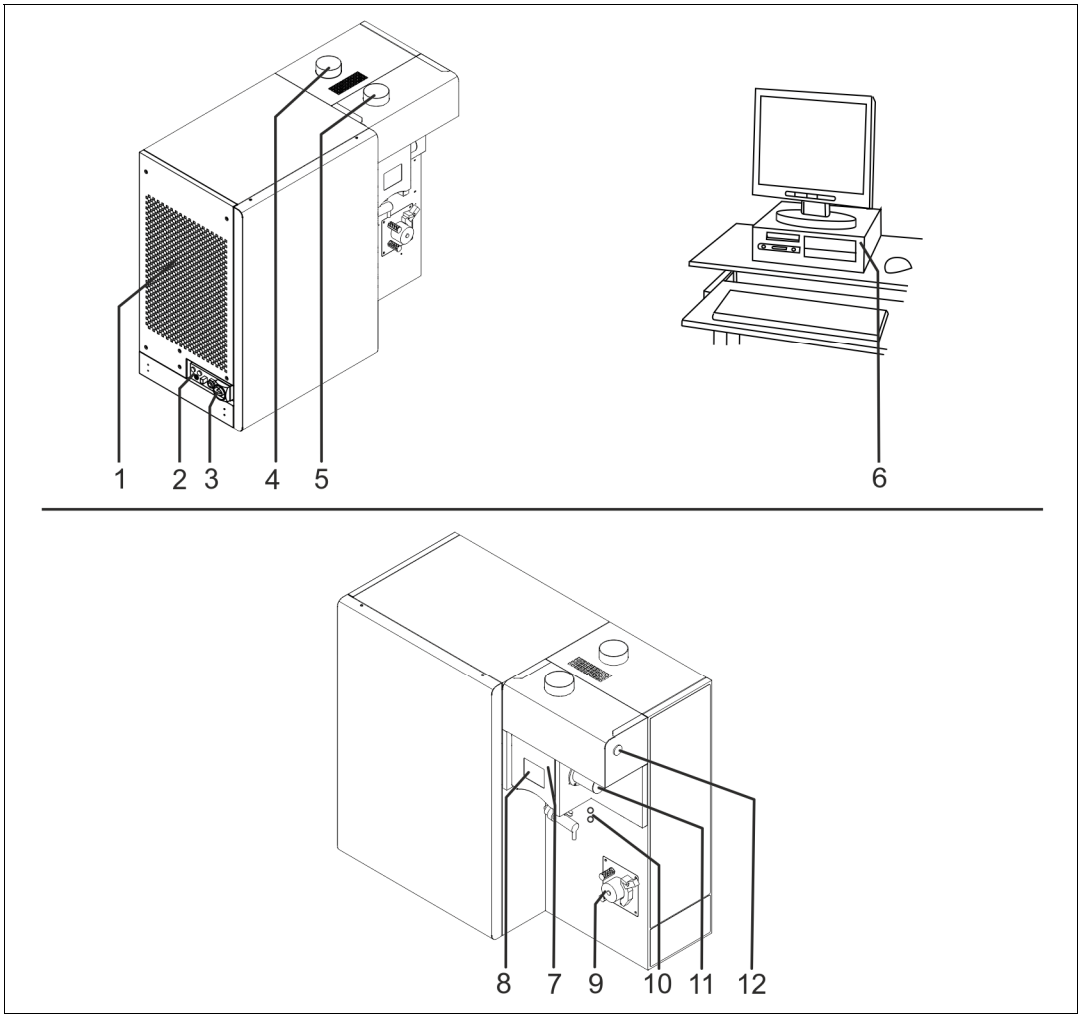


Fig. 1 (SOP)

| No. | Component |
|---|---|
| 1 | Air filter |
| 2 | Connection points |
| 3 | Main switch |
| 4 | Generator exhaust |
| 5 | Extraction box housing (plasma torch) |
| 6 | PC |

| No. | Component |
|---|---|
| 7 | Plasma torch box housing |
| 8 | Window to observe plasma |
| 9 | Peristaltic pump (sample transport) |
| 10 | Nebulizer/additional gas connection |
| 11 | Booster (option SOP) |
| 12 | Plasma off |

### 1.3.2 Connections (left-hand side)

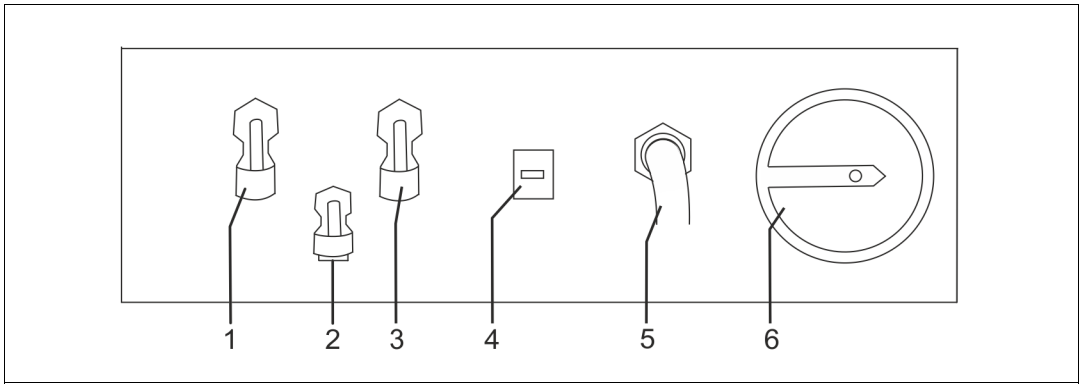


Fig. 2

| No. | Component |
|---|---|
| 1 | Argon connection |
| 2 | Optical system (Option) |
| 3 | Oxygen connection (Option) |

| No. | Component |
|---|---|
| 4 | PC connection |
| 5 | Power cable |
| 6 | Main switch |

### 1.3.3 Peristaltic pump

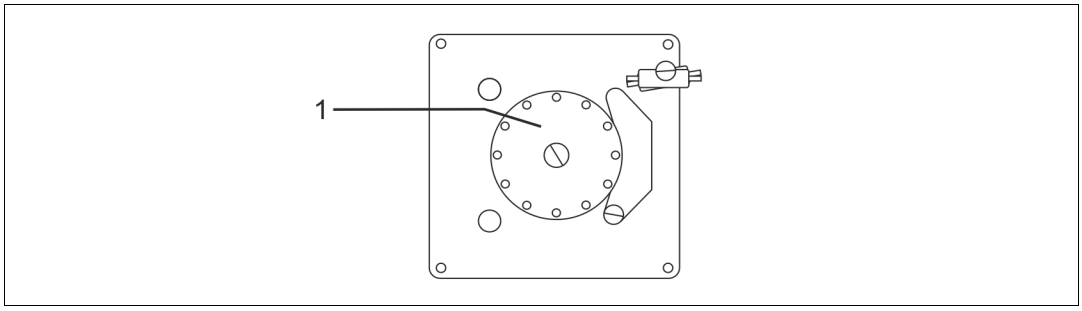


Fig. 3

| No. | Component |
|---|---|
| 1 | Peristaltic pump |

## 1.3.4 Sample introduction system

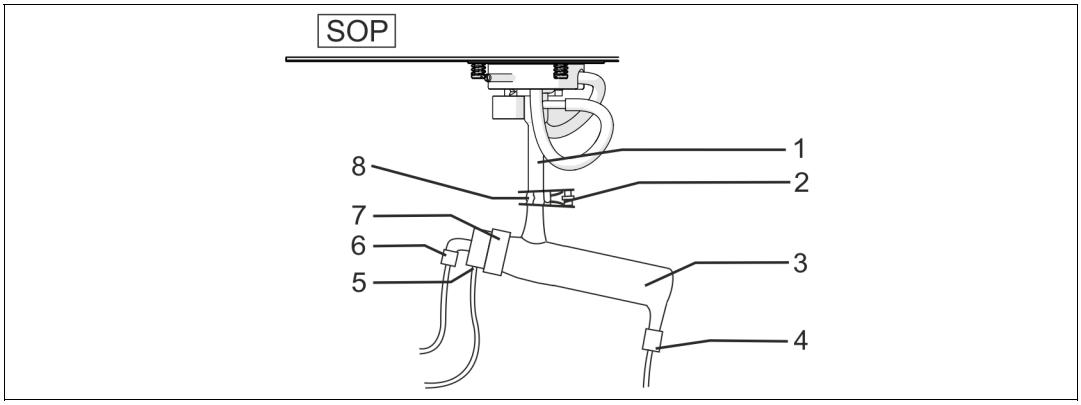


Fig. 4

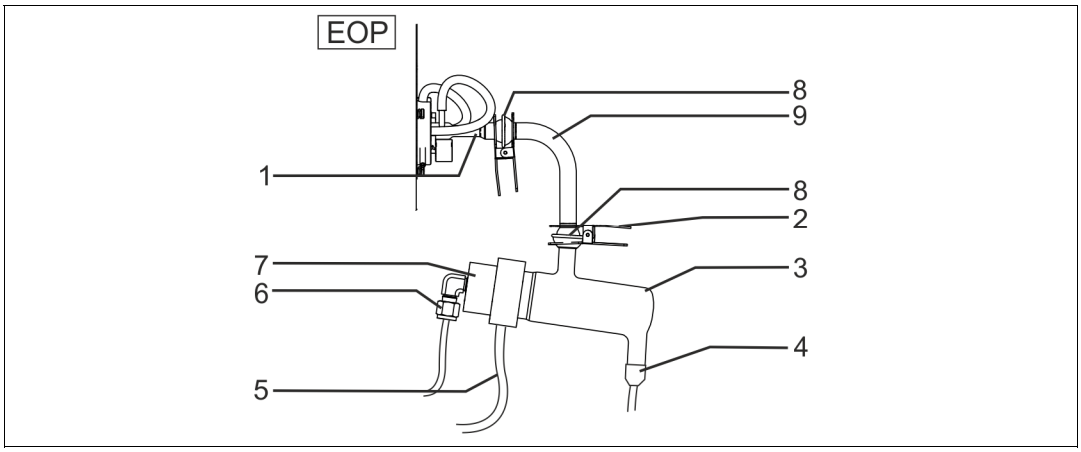


Fig. 5

| No. | Component |
|---|---|
| 1 | Plasma torch |
| 2 | Clamp |
| 3 | Spray chamber |
| 4 | Spray chamber outlet |
| 5 | Sample introduction connection (from peristaltic pump) |

| No. | Component |
|---|---|
| 6 | Argon connection |
| 7 | Nebulizer |
| 8 | Sealing sleeve |
| 9 | 90° spray chamber adapter |

## 1.3.5 Plasma torch box

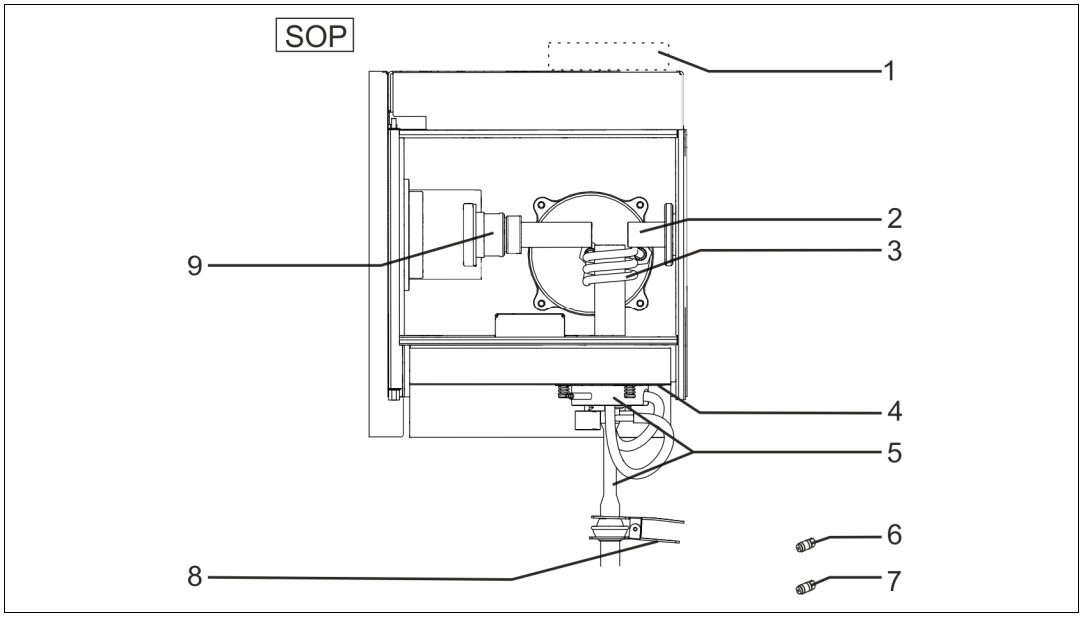


Fig. 6

When using systems with radial plasma viewing (SOP), the plasma torch in the torch box housing is installed vertically.

| No. | Component |
|---|---|
| 1 | Extraction box housing and torch |
| 2 | Booster (option SOP) |
| 3 | Load coil |
| 4 | Plasma torch bracket |
| 5 | Plasma torch |

| No. | Component |
|---|---|
| 6 | Nebulizer gas connection |
| 7 | Additional gas connection |
| 8 | Clamp |
| 9 | Plasma interface (SPI) |

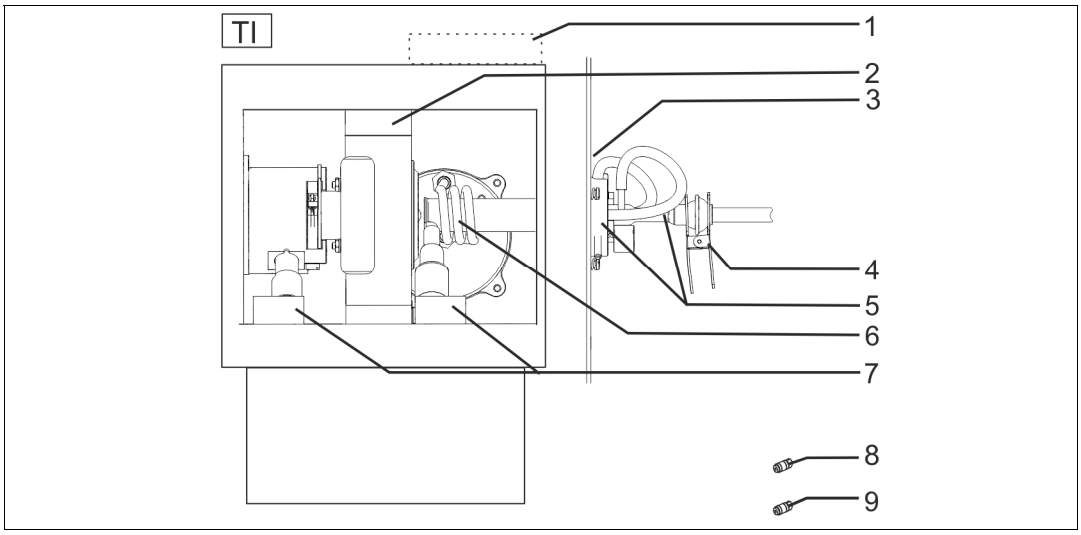


Fig. 7

| No. | Component |
|---|---|
| 1 | Extraction box housing and torch |
| 2 | Plasma interface (OPI) |
| 3 | Plasma torch bracket |
| 4 | Clamp |
| 5 | Plasma torch |

| No. | Component |
|---|---|
| 6 | Load coil |
| 7 | Light bridge (TI) |
| 8 | Nebulizer gas connection |
| 9 | Additional gas connection |

# 2 Safety

Every user of the instrument must have read and understood these operating instructions. This applies in particular to the safety instructions.

## 2.1 Symbols used

The following symbols are used in these abbreviated operating instructions and/or on the instrument.

If required, additional important information is available in connection with these symbols.



General warning sign!



Warning! High voltage!



Warning! Hot surface!



Warning! Toxic substances!



Warning! Sharp edges!



Warning! Optical radiation!



Warning! Risk of suffocation!



Warning! Risk of hand injury!



Warning of non-ionizing radiation!

### Notice!

Warns of activities or conditions that may adversely affect the function of the instrument.

### Information

Displays information that is important for the correct and safe use of the instrument.

## 2.2 User information

- Compliance with all safety instructions is mandatory. It's for your own safety.
- The instrument - in its transport packaging - may only be transported by expert organizations or by specifically trained personnel.
- The instrument is front-heavy with its center of gravity located in the optical system (front left side of the instrument).
- Unpacking, installation, setup and connection of the instrument may only be performed by service personnel that is authorized by the manufacturer.
- Carry out only operator maintenance work that is described in chapter 6 of the operating instructions. Any further services (e.g. technical maintenance) or repairs must only be performed by service personnel that are authorized by the manufacturer.
- During the operation and while performing maintenance tasks compliance with safety instructions and accident prevention regulations is mandatory.
- The safety measures must be checked following every technical maintenance or repair activity. The checking procedure is carried out in accordance with DGUV V3 (German Social Accident Insurance) or an equivalent national regulation.
- Compliance with the maintenance schedule specified by the manufacturer and recording all maintenance activities is mandatory. This will maintain the operational safety of the instrument.
- Never tamper with the safety devices! If it is suspected that a safety device does not work properly, shut down the instrument immediately! Please contact your Service Center.
- Please observe the information labels provided on the instrument.
- Only genuine spare parts must be used when repairing the instrument. The use of non-genuine spare parts will make the CE Declaration of Conformity null and void. Excepted are spare parts from manufacturers approved by SPECTRO.

- Only the use of genuine spare parts and consumables ensures the safe operation and achievement of the specified output. This applies especially to all components of the sample introduction system and, in particular, to the plasma torch.
- The instrument may only be operated on networks with PE protective conductor (PE).
- Only use the instrument in dry ambient conditions.
- If an instrument is positioned on a sloped surface and equipped with wheels, it may roll away during the operation. Secure the instrument while in operation. This applies also when the instrument is being transported.
- Compliance with the relevant safety regulations when using tools and operating equipment is mandatory.
- Prior to opening the instrument, disconnect the power plug.

## 2.3 Intended use

- The instrument is a stationary analyzer which is not moved during operation.
- Only liquid substances approved by the manufacturer may be measured with the instrument in a laboratory environment.
- During the operation of the instrument, compliance with the ambient conditions according to the technical specification is mandatory.
- During operation, adequate air extraction and ventilation of the operating room must be ensured.
- The instrument must only be operated with the specified operating media at the max. specified pressures.
- The collection containers for sample substances must be made of a material that is resistant to the tested specimen.
- Cleaning (decontamination) may only be performed with a cleaning agent stipulated by the manufacturer.
- Before using any cleaning or decontamination procedure other than the procedure specified by the manufacturer, the OPERATOR must check with the manufacturer that the intended method will not damage the instrument.
- Never attempt to disable safety devices.
- Laboratory clothing must be tight-fitting so that the garment cannot be pulled into rotating parts (e.g. peristaltic pump).

## 2.4 Prohibited operating conditions

Do not operate the instrument if one of the following conditions exists:

- If the instrument is faulty or damaged.
- If the instrument is not maintained at regular intervals.
- If the ambient conditions do not comply with the specification.
- If the area where the instrument is used is not a commercial/industrial premise.

## 2.5 Residual risks

This instrument has been manufactured in accordance with the latest state-of-the-art technology. Residual risks cannot be completely excluded, however.



### Warning! Risk of injury and health hazard!

- Hazardous sample residues may be present in the sample introduction system and waste containers.
  - ➔ Take suitable safety precautions before working with the sample residue.
  - ➔ Observe the safety data sheets as well as the H and P phrases that apply to the sample material and/or the solvent used.
- The content of the UV Plus purifier is a hazardous substance.
  - ➔ The associated material safety data sheet is available at http://MSDS.spectro.com.



### Warning! Toxic substances!

- Vapors may be generated from the sample material. These may be toxic and/or corrosive.
  - ➔ Ensure that protective measures are taken in such cases, e.g., respiratory protection.
- The sample material may be toxic and/or corrosive.
  - ➔ Ensure that the external exhaust system functions properly.



### Warning! Hot surface!

The plasma torch, plasma interface and load coil heat up during operation.

- Always let the components cool down before working on them.



## Warning - Rotating pump!

Long hair, drooping clothes and jewelry can get caught and pulled into the pump. Injuries are likely to occur.

- Never wear drooping clothes and jewelry when working near rotating parts.
- A hair net must be worn to cover long hair.

Since the pump develops only max. 80 Ncm, the risk of injury is only very slight.



## Warning! Risk of suffocation!

The instrument is operated with argon. Argon is heavier than air. In case of leakage, argon can accumulate in enclosed spaces and especially on the floor or lower-lying areas.

- Ensure that adequate ventilation is provided. If necessary, install oxygen sensors.



## Warning! Optical radiation!

Plasma emits UV radiation. A protective pane is used to shield from radiation.

- Operate the instrument only with the protective pane in place and the door closed.



## Warning of non-ionizing radiation!

A high-frequency emitter is used to operate the ICP, dependent on the type of model. The electromagnetic emission is below the legally specified limit values.



- Please point out to your employees that an electromagnetic emitter is used by attaching the cardiac pacemaker symbol!



## Warning! High voltage!

Higher electrical voltages occur inside the spectrometer.

- Shut down the instrument immediately if it is damaged.
- Never tamper with the safety devices! If you suspect that a safety device does not work properly, shut down the instrument immediately!



## Information

In order to ensure the availability and operational safety of the equipment, we recommend having the system checked for correct operation and performance at least once a year by specialized technicians. Addresses of service organizations authorized by SPECTRO can be found at www.spectro.com.

# 3 Technical data

| Description | Value |
|---|---|
| Instrument height | 1140 mm; 44.9" |
| Instrument width | 1290 mm; 50.8" |
| Instrument depth | 580 mm; 22.9" |
| Instrument weight | approx. 170 kg; ~ 375 lbs |
| Required space | 1290 x 580 mm; 50.8 x 22.9“ |
| Power supply | 187 - 253 V AC, 50/60 Hz<br>Phase + Neutral + PE, the instrument is equipped with a CEE 32A plug. |
| Instrument power consumption | 3.5 kVA |
| Instrument required line protection | 30 – 32 A (inertial) |
| Sound pressure level | 63 dBA |
| Protection class<br>DIN 40050 | IP20 |
| Storage conditions | 2 - 40°C; 36 - 104°F |
| Operating range (permissible ambient temperature) | 15 - 30°C; 59 - 86°F |
| Recommended temperature range for reaching the specified performance | 18–25°C; 64–77°F, maximum temperature gradient ΔT = 3°C/h (5.4°F/h) |
| Atmospheric humidity | < 80% rel. (non-condensing) |
| Air quality | Free of corrosive components and high dust concentrations |
| Operation: | Max. 2000 m above mean sea level |
| Argon gas connection | |
| Inlet pressure during operation | 6 - 8 bar (87 - 116 psi) (Data sheet)<br>7 bar (101 psi) recommended<br>A maximum Ar inlet pressure of 8 bar (116 psi) must not be exceeded. |
| Quality | ≥ 4.6 (99.996 %) |
| Consumption | ≤ 25 L/min |

| Description | Value |
|---|---|
| Oxygen supply for auxiliary gas (optional; for organic applications only) | |
| Inlet pressure during operation | 4.0 bar (58 psi) |
| Quality | ≥ 4.5 (99.995 %) |
| Flow rate | The flow rate depends on the application. |
| Nitrogen for optical system (instead of argon, optional) | |
| Inlet pressure during operation | 6–8 bar (87–116 psi)<br>7 bar (101 psi) recommended |
| Quality | ≥ 5.0 (99.999 %) |
| Flow rate | 0.5 L/min normal flushing rate<br>4 - 5 L/min, high flushing rate for rapid production of transparency in the UV range |
| Extraction (continuous) | |
| Plasma torch box (TI) | Depending on the ambient temperature<br>18 – 25 °C = 200 – 250 m³/h; 118 – 150 CFM<br>> 25 °C = 250 – 300 m³/h; 150 – 177 CFM |
| Plasma torch box (SOP) | Depending on the ambient temperature<br>18 - 25°C = 120 - 200 m³/h; 71 - 118 CFM<br>> 25°C = 150 - 230 m³/h; 88 - 136 CFM |
| Generator extraction or without extraction | 200 - 250 m³/h; 118 - 150 CFM<br>Or blowing into the room without obstruction |

# 4 Transportation/Setting-up

General information:

- The instrument is front-heavy with its center of gravity located in the optical system (front left side of the instrument).
- The instrument weighs approx. 170 kg (~ 375 lbs) and its weight is not evenly distributed.
- The instrument - in its transport packaging - may only be transported by expert organizations or by specifically trained personnel.
- Only trained personnel shall be permitted to use the bars to transport the instrument. If possible, other lifting and transport equipment shall be used.
- The instrument must be transported upright.
- Unpacking, installation, setup and connection of the instrument may only be performed by service personnel that is authorized by the manufacturer.

## Notice – Damage to instrument!

If the instrument is to be moved to another place of installation after set-up, there is a risk of damaging the instrument.

- Contact the SPECTRO Service Department in this matter.

## 4.1 Space requirements

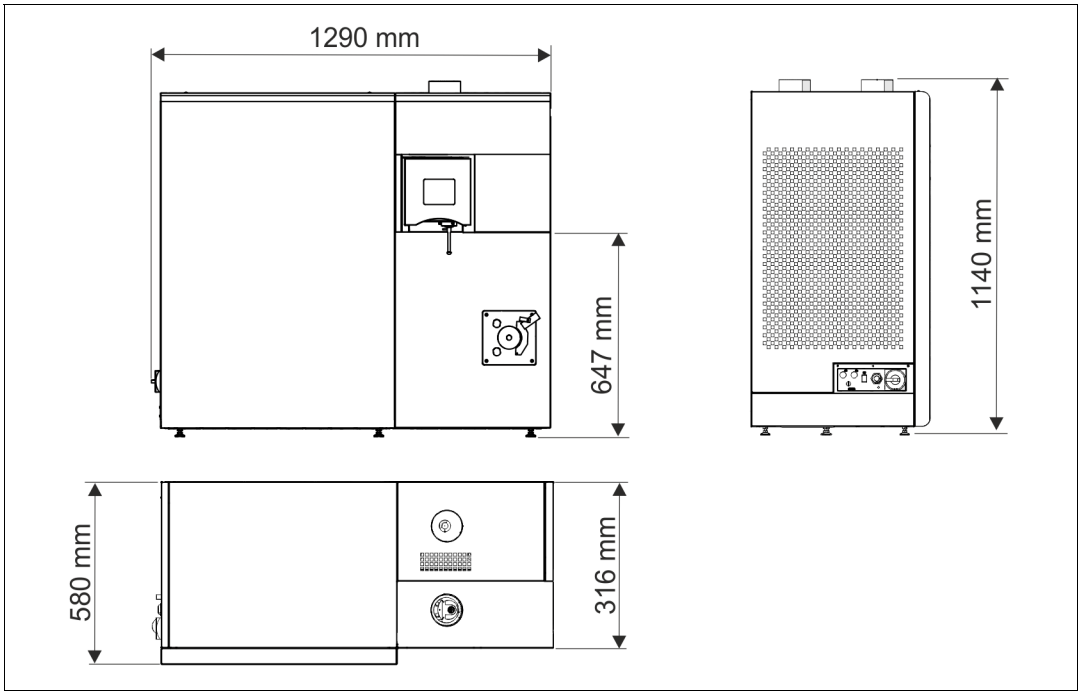


Fig. 8

## 4.2 Set-up

### Information! Measurement errors!

- If the instrument is subject to vibrations and shocks, measurement errors may occur during the measuring process.
  - ➔ The instrument must be installed at a vibration- and shock-free location.
- Measurement errors result from temperature differences inside the instrument.
  - ➔ The instrument must be installed at a location, where it cannot heat up or cool down on one side only.

Observe the following information regarding the instrument's installation:

- All connections are located on the left-hand side.
- The instrument must be accessible from all sides for maintenance. Set up the instrument accordingly.

- A table of corresponding dimensions and load-carrying capacity is required, see page 17.
- In addition to the space required by the **SPECTROGREEN FMX46**/2020, some space is needed for the gas supply, unless fixed gas connections are available.
- The **SPECTROGREEN FMX46**/2020 is operated from the front, from the right-hand and the left-hand side of the housing. Sufficient space should be provided for the computer workstation (keyboard, monitor, printer, and sample changer, if necessary) and operating personnel.

## 4.3 Ambient temperature

Air conditioning of the room is only required under extraordinary conditions. Smaller room temperature fluctuations up to 3°C/h (5.4 F/h) are not accounted due to the construction of the instrument. However, one-sided heating or cooling must be avoided at all costs.

The specified values only apply to the recommended ambient temperature range. Using the instrument beyond the recommended ambient conditions may lead to poorer analytical results.

## 4.4 Dust load

Avoiding contamination problems in the analysis requires a relatively dust-free environment.

The maximum dust load should not exceed 36 million particles (0.5 µm or larger) per cubic meter of air. Operating the instrument in an environment with a higher dust load shortens maintenance intervals and may damage the instrument. Example for comparison: A usual, clean office environment contains 18 to 36 million particles per cubic meter of indoor air.

To avoid instrument damage, the instrument must also be set up in an environment which is free from corrosive vapors.

## 4.5 Storage

Storage conditions:

- Unit must be stored in a dry place
- Room temperature 2°C–40°C (35.6°F–104°F)
- Avoid storing the instrument at very low temperatures.

## 4.6 Gas supply



### Information! Measurement errors!

- Impurities in the argon supply will produce measurement errors and/or will make ICP operation impossible.
  - ➔ Ensure the installation of the argon supply line is free of oil and grease.

An argon supply system is required for the instrument.

As an option, a nitrogen gas supply is required for the optical system.

The operating company must ensure that the design of the connection used on the outlet side of the gas pressure regulator complies with the applicable national regulations.

A suitable pressure reducer is required for the argon and the nitrogen supply (bottles or liquid gas tank).

- The maximum argon inlet pressure is 8 bar (116 psi).

The tubing for the argon supply system is included in SPECTRO's scope of supply (5 m long, OD/ID = 8/6 mm). This tubing is screwed to the connection point on the right-hand side of the instrument. The connection point to the instrument is included in the scope of supply. The connector on-site is customer-specific and, therefore, not part of the delivery.

The following flow quantities are used for aqueous samples during normal operation:

**Argon**

| | |
|---|---|
| Coolant: | 9 to 20 L/min, typically 12 L/min |
| Auxiliary gas: | 0.6 to 3 L/min, typically 0.8 L/min |
| Nebulizer gas: | 0.1 to 1.5 L/min, typically 0.8 L/min |
| Optical system (optional) | 0.5 to 5 L/min, typically 0.5 L/min |

**Nitrogen (optional)**

| | |
|---|---|
| Normal flushing rate | 0.5 L/min |
| High flushing rate | 4 - 5 L/min |

## 4.7 Exhaust air (to the outside)



### Warning of toxic substances!

- Vapors may be generated from the sample material. These may be toxic and/or corrosive.
  - ➔ In these cases, provide protective measures, e.g. breathing apparatus
- The sample material may be toxic and/or corrosive.
  - ➔ Ensure that the external exhaust system functions properly.

Exhaust air nozzles are located at the top of the instrument.

The corrosion-free exhaust chimneys must be connected with the laboratory exhaust system using a non-flammable, flexible and corrosion-resistant hose (ID 100 mm). The fan must be resistant to chemicals and designed to operate at temperatures up to 80°C (176°F). The exact position of the exhaust nozzles is shown in the figure below.

All installation must be performed in a professional manner and in accordance with applicable engineering standards in order to prevent risk to life and limb and avoid damage to material property.

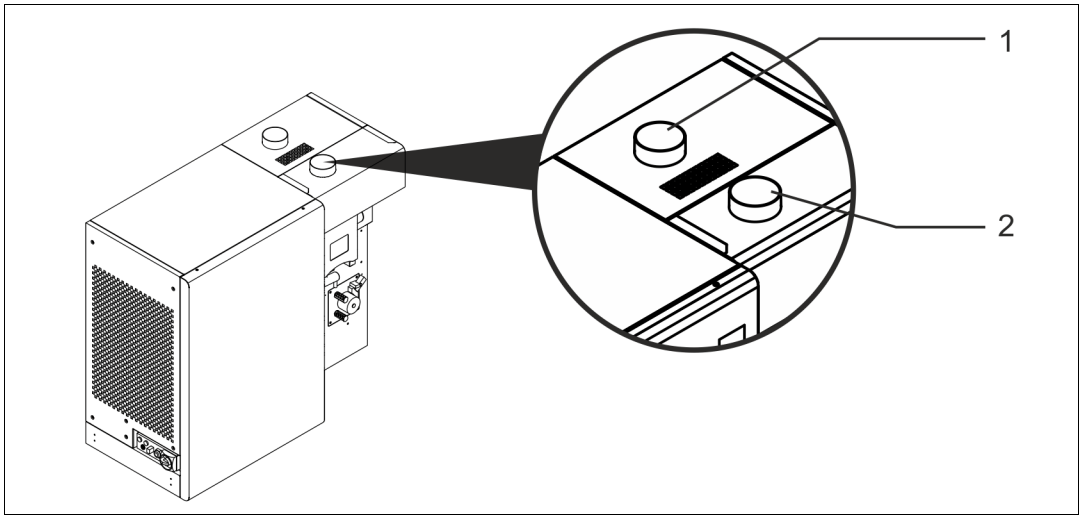


Fig. 9

| **Extraction capacity at the nozzle** | |
|---|---|
| 1 (rear)<br>Generator | 2 (front)<br>Plasma torch box housing |
| 200 - 250 m³/h; 118 - 150 CFM<br>Or blowing into the room without obstruction | TI – Depending on the ambient temperature<br>18 – 25 °C = 200 – 250 m³/h; 118 – 150 CFM<br>> 25 °C = 250 – 300 m³/h; 150 – 177 CFM |
| | SOP – Depending on the ambient temperature<br>18 - 25°C = 120 - 200 m³/h; 71 - 118 CFM<br>> 25°C = 150 - 230 m³/h; 88 - 136 CFM |

# 5 Operation

## 5.1 Overview of controls

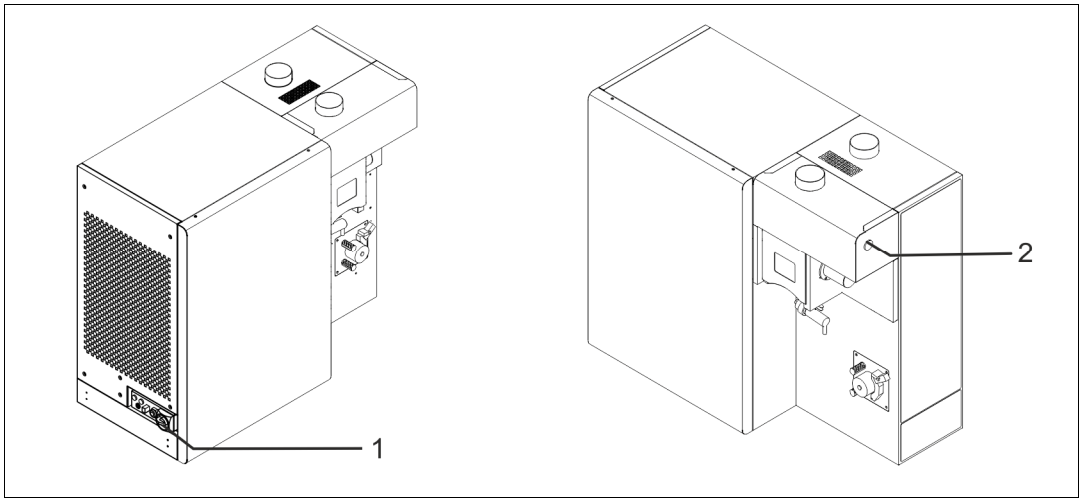


Fig. 10

| no. | Control element | Function |
|---|---|---|
| 1 | Main switch | Switches the power supply (On/Off) |
| 2 | Plasma Off | Switches the plasma off |

## 5.2 Preparing the instrument for use

Before switching on the instrument, proceed as follows:

1. Instructions on how to install the plasma torch and the sample introduction system, see page 8.
2. Open the argon supply valve and the $N_2$ supply for the optical system (if installed).
   - ➔ Set the Argon pressure to 7 bar. Set the $N_2$ pressure (optional).
   - ➔ The plasma cannot be started at a pressure of < 6.0 bar. A corresponding error message will be displayed.
3. Ensure that the extraction system is activated and that the specified exhaust capacity is reached.
4. Ensure that all flaps and doors are closed.

✓ The instrument is ready for use.

## 5.3 Switch on the instrument, ready for operation, plasma start

### Information

To operate the instrument in compliance with the specification, it should be stabilized for at least 3 hours after it has been switched on. In the event that the instrument is not equipped with the UV-Plus option, but with gas-purged optics, the time for a specification-compliant operation is extended. In this case, the optics is initially operated at a high purge rate (4 L/min). Once the system is stabilized, it is switched to the normal flushing rate (0.5 L/min).

Because this procedure is dependent on the temperature during instrument transport or storage, a longer time may be required.

Before all other activities, ensure that the operating temperature of the optical system (32 °C (90 °F)) has been reached.

The plasma can be started either directly after the instrument has been switched on or after the stabilization period.

When the plasma is started, a suitable blank sample should be nebulized during the stabilization period.

To switch on the instrument, proceed as follows:

1. Turn the main switch to “On”.
2. Switch on the computer.
   - ➔ The operating system is booted.
3. Start the instrument's software ICP ANALYZER PRO after the operating system has been completely booted.
   - ➔ Allow the instrument to stabilize for at least 3 hours after switching it on (optical system). If the optics system is flushed, this time is extended.
   - ➔ Ensure that the operating temperature of the optical system (32°C (90°F)) has been reached. A longer stabilization period may be required.
   - ➔ The instrument is ready for operation.

4. Click the plasma icon to open the instrument control parameters:



Click the “Purge” button in order to purge the sample introduction system for 2 minutes with Argon. Ensure that the pressure clamps of the peristaltic pump are clamped tightly around the sample tubing. This prevents the sample from getting into the spray chamber or the torch.

5. Click the “START PLASM” button in order to Activate the plasma start.
   - ➔ The sample introduction system is automatically flushed with argon.
   - ➔ At the end of this process, the plasma starts.
6. Click the “START PUMP” button in order to activate the peristaltic pump.
   - ➔ Depending on the application, distilled water or a zero solution ("blank"), which is adjusted to the matrix, should be nebulized for approx. 10 minutes in order to heat up and stabilize the components.

✓ The instrument is now switched on and the plasma starts.

## 5.4 Switch off the instrument/plasma



### Information

Leave the instrument in standby mode whenever possible (main switch set to "On".) When using the instrument with the optical system but without UV-Plus option, the optics should be operated permanently at normal flushing rate (0.5 L/min). This ensures good long-term stability and prevents the flushing time for the stabilization described under 5.3.

To switch off the instrument, proceed as follows:

1. Flush the sample introduction system for approx. 10 minutes with a suitable blank solution, e.g., distilled water for aqueous applications.
   - ➔ This avoids crystallization in the sample introduction system.
2. Select the “Solid State Generator” dialog in the instrument control parameter dialog window. Click the “Stop Plasma” button in order to turn off the plasma, or press the “Plasma Off” button (blue button) on the right side of the instrument.
   - ➔ The plasma extinguishes.

3. Press the “X” button in the upper right-hand corner of the application window in order to end the instrument’s software (ICP ANALYZER PRO).
   ➔ The program is terminated.
4. Select the dialog item "Shut down" in the “Start” menu of the operating system and confirm the dialog box.
   ➔ The computer is switched off.
5. Close the external valves of the Argon supply. (Only if the optics is not flushed with argon. If the optics is flushed, a permanent rinse rate of 0.5 L/min is recommended).
6. Loosen the pressure clamps of the peristaltic pump and relieve the pump tubing by removing them from the retaining clamps.
7. Switching the instrument off:
   ➔ Turn the main switch to "Off" (see note).
   ➔ Switch off the exhaust system.
   ➔ If necessary, close the external valve of the nitrogen gas supply.

✓ The instrument is switched off.

## Information

If step 7 is omitted, the instrument is in the "Instrument Standby" mode. In order to reactivate the instrument, follow the instructions in chapter 5.3, starting at step **2**, see page 26. The stabilization period is drastically reduced.

# 5.5 Carrying out the measurement

## 5.5.1 Preparing the measuring procedure

Before starting the measurement, proceed as follows:

1. Ensure that the spectra calibration has been performed.
2. Proceed with a calibration; if required, see page 31.
3. Check the safety measures if you work with hazardous or corrosive samples.

✓ The instrument is now ready for measuring samples.

**Spectra calibration of the optical system**

The spectra calibration of the optics is mandatory:

- after a software message (wavelength drift).
- after it has been switched on and after the temperature stabilization.
- before setting up a new method.
- before proceeding with high-precision measurements.

I. Aqueous applications

The wavelength calibration of aqueous applications requires a solution of the following composition:

| Element | Concentration mg/L |
|---|---|
| Ca | 1 |
| Be | 2 |
| Li | 2 |
| Sr | 2 |
| Mn | 5 |
| Mo | 5 |
| Na | 5 |
| Sc | 5 |
| Ce | 10 |
| Cu | 10 |
| Fe | 10 |

| Element | Concentration mg/L |
|---|---|
| Eu | 10 |
| In | 10 |
| K | 10 |
| Ni | 10 |
| P | 10 |
| Si | 10 |
| Ti | 10 |
| V | 10 |
| Y | 10 |
| Zr | 10 |
| S | 50 |

The solution must also contain:

- 20 mL/L HCl
- 20 mL/L $HNO_3$

The deviation of the specified element concentrations must not exceed 0.5%. Greater deviations may adversely affect the analytical performance.

II. Organic applications:

For organic applications, a one-time spectra calibration with the aqueous ICAL solution must first be performed. Subsequently, the relevant reference spectra must be recorded. For a detailed description, refer to the online help of the instrument.

Commercial solutions for the spectra calibration, optimization or equipment check are available from your local SPECTRO organization.

In order to proceed with the spectra calibration, follow the instructions below:

1. Start the plasma.
2. Flush the sample introduction system for approx. 10 minutes.
   ➔ Use distilled water for aqueous applications.
3. Select the wavelength calibration symbol in the navigation tool bar.

   

   At the bottom of the window, the current calibration and the status of the calibration are displayed. Click the “Start Spectra Calibration” button in order to calibrate the optics.

   The information box communicates whether the calibration has been completed successfully or if errors occur.

✓ The optics is now calibrated.

### Calibrating a method

In order to recalibrate the instrument, proceed as follows:

1. Go to the navigation tool bar and select the “Methods” module. Select a method in the method view and click the “Measure standards” button.

   Alternative: Go to the navigation tool bar and select the “Measurement” module. Select a workbook in the workbook view and click the “Switch to calibration module” button.

2. Select the first standard in the list.

   ➔ First measure the standards with the lowest concentrations and then the ones with higher concentrations.

3. Use the peristaltic pump in order to feed the corresponding sample to the sample introduction system.

4. Click on the “Measurement“ button.

   Once the measurement has been completed, stop the measurement and click the “Finish” button.

5. Activate the next standard in the list.

6. Click again on the "Measurement" button.

7. Once the measurement has been completed, stop the measurement and click the “Finish” button.

8. Proceed in this way until all standards contained in the list were measured.

9. When all standards contained in the list were measured, click on the ”Calculate“ button.

✓ The method is now calibrated.

### 5.5.2 Start the measurement

To perform a measurement, proceed as follows:

1. Select “Measurement” on the navigation tool bar. Select a "Workbook" and load it by clicking the "Load" button.
   - ➔ If there is no work folder in the directory, a suitable workbook and a method must be created first. To do this, use the online help.
2. Feed the sample to be measured to the sample introduction system by means of the peristaltic pump.
3. Press the “Measure” button in order to start the measurement.
   - ➔ The measurement is carried out automatically.
   - ➔ When the measurement is complete, the results are displayed on the screen.
   - ➔ Press the “Finish” button to terminate the measurement process.

✓ The measurement process is finished.

Perform further measurements as needed.

# 6 Maintenance

## 6.1 Maintenance schedule

### Information

In order to ensure the availability and operational safety of the equipment, we recommend having the system checked for correct operation and performance at least once per year by specialized technicians. To find contact addresses of service organizations authorized by SPECTRO go to www.spectro.com

The maintenance intervals specified in the following table are guidelines which should be observed as a minimum requirement. The maintenance intervals may vary, depending on the use of the instrument.

To ensure the flawless function of the instrument, proceed with the following maintenance tasks:

| **Start of work** | **Tasks to be performed** |
|---|---|
| Check the gas supply | Minimum residual pressure in bottle: 40 bar. |
| Peristaltic pump tubing and sample introduction system tubing | Check for damage and flow. |

| **Weekly maintenance work** | |
|---|---|
| Nebulizer | Check for contamination and clogged lines. Clean if required, see page 39. |
| Spray chamber | Check for contamination and streaks. Clean if required, see page 40. |
| OPI (EOP) | Check for contamination. If necessary, remove and clean the sampler, see page 47. |
| Backup of analysis data | |

| **Monthly maintenance work** | |
|---|---|
| Plasma torch box | Check the plasma torch and spray chamber for damage and contamination. Clean or replace if required, see page 35. |
| Nebulizer | Check quality of aerosol generation, see page 41. |
| Air filter (below the left rear instrument cover) | Replace, if dirty. |

| Further maintenance tasks | |
|---|---|
| Induction coil | Check for corrosion. Clean if required, see page 42. |
| Pump tubing | Check for damage. Replace if required, see page 53. |
| UV-PLUS Purifier | Use the instrument software program (“System information” dialog) to check the remaining service life for the “UV-PLUS Purifier”. |

## 6.2 Cleaning the plasma torch



### Warning! Hot surface!

The plasma torch, the plasma interface, and the induction coil can become extremely.

- Let the components cool for 10 to 15 minutes before commencing work on them.



### Warning! Sharp edges!

Glass parts may break when handled incorrectly and cause cutting injuries.

- Proceed with due caution and/or take appropriate safety precautions (e.g., wear gloves).

### Notice – Damage to instrument!

Plasma torch components that are not made of quartz glass may be damaged by the cleaning solution or its vapors.

- Clean only the quartz glass of the plasma torch in the cleaning solution.

To clean the plasma torch, proceed as follows:

1. Switch off the plasma.
2. Loosen and remove the clamp(s) between the plasma torch and the spray chamber.
3. Loosen the plasma torch by turning it counterclockwise.
4. Remove the plasma torch.

5. Disassemble the plasma torch.
   - ➔ Loosen the clamping screw (1).
   - ➔ If necessary, loosen the clamping ring (2) with a screwdriver or another suitable tool.
   - ➔ Pull the torch (3) slightly out of the adapter
   - ➔ Remove the hoses (A, C).
   - ➔ Pull the torch out of the adapter.

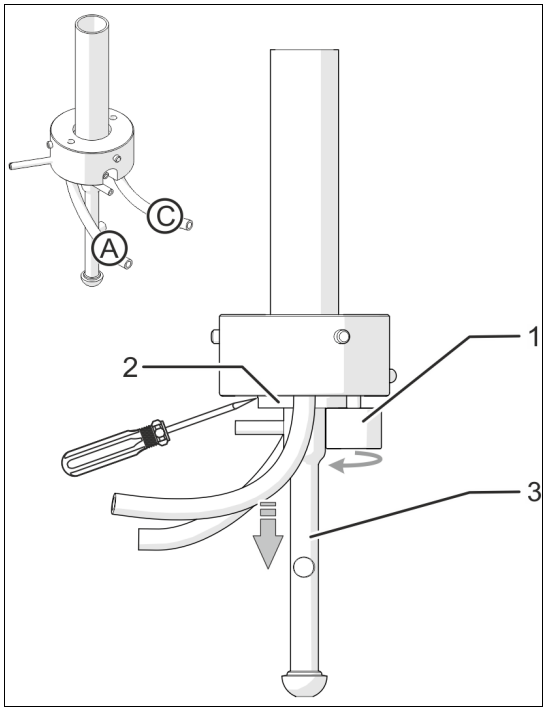

Fig. 11

6. Clean the components of the plasma torch.
   - ➔ Place the torch (3) in aqua regia (a mixture of one part concentrated nitric acid and three parts concentrated hydrochloric acid).
     - ➔ Hazardous substance! Observe the corresponding information on hazardous materials.
   - ➔ Let the acid/cleaning solution act for approx. 15 minutes.
   - ➔ Subsequently, use distilled water to rinse the torch and dry it completely.

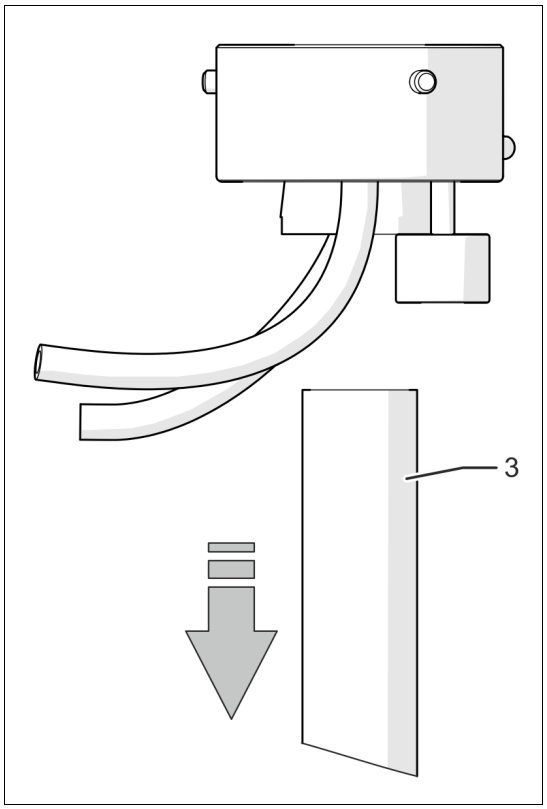

Fig. 12

7. Use a lint-free cloth in order to clean the adapter, then proceed with a visual inspection.
8. Re-mount the plasma torch.
   - ➔ The same steps, carried out in reverse order, are used for mounting the plasma torch, see point 5.
   - ➔ Push the torch (2) into the adapter (1) until the coolant gas connection is concentric with the recess in the adapter (3).
   - ➔ There is a tolerance of ±1 mm to optimize the height of the torch.
   - ➔ Reconnect the hoses (A, C).

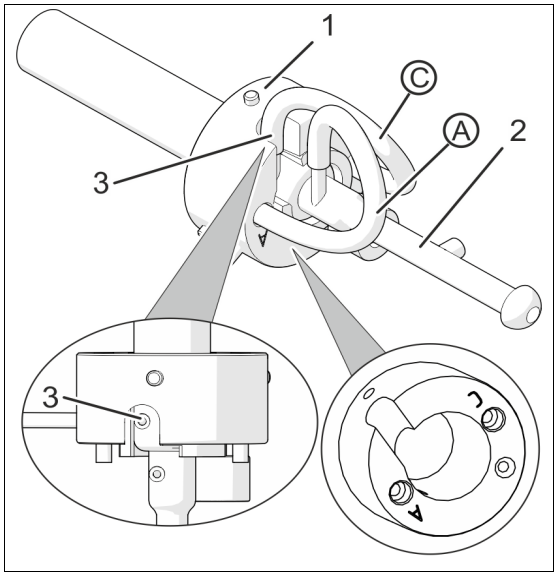

Fig. 13

## Inserting the plasma torch:

I. Insert the torch in the appropriate position and turn the lever (1) clockwise until it snaps into place.

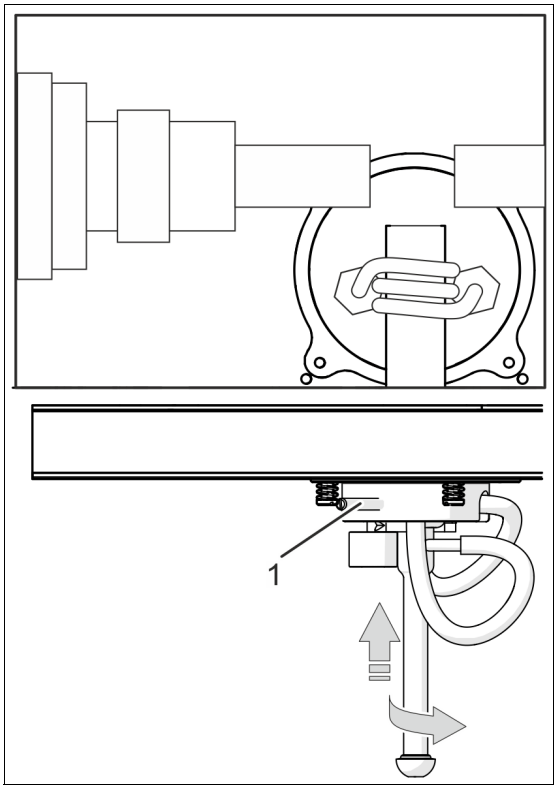


Fig. 14: Radial plasma viewing

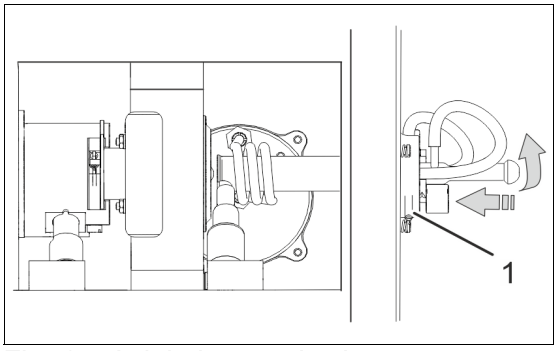


Fig. 15: Axial plasma viewing

✓ The plasma torch has been cleaned.

## 6.3 Cleaning the nebulizer (standard Crossflow Nebulizer)



### Warning! Risk of injury!

There may be acid residues or other hazardous residues from sample material in the nebulizer and the spray chamber.

- Observe the corresponding information on hazardous materials.



### Warning! Sharp edges!

Glass parts may break when handled incorrectly and cause cutting injuries.

- Proceed with due caution and/or take appropriate safety precautions (e.g., wear gloves).

To clean the nebulizer, proceed as follows:

1. Flush the sample introduction system for approx. 10 minutes with a suitable blank solution, e.g., distilled water for aqueous applications.
2. Switch off the plasma.
3. Loosen the clamp between the plasma torch and the spray chamber.
4. Carefully pull off the spray chamber.
5. Disconnect all other connections from the nebulizer and the spray chamber.
6. Separate the nebulizer from the spray chamber by slightly twisting it and disconnect the argon connection.
7. Remove the adapter for the argon connection.
8. Put the nebulizer into a beaker and carefully fill it with diluted hydrochloric acid.



### Hazardous substance!

- Observe the corresponding information on hazardous materials.

9. Let the acid act for up to 15 minutes (depending on the degree of contamination).
   - ➔ When heavy contamination must be removed, another suitable acid or aqua regia may be required.
   - ➔ If there are deposits on the capillary tube, remove them very carefully with a fine copper wire. Be extremely careful to avoid damage to the capillary tube.

10. Then flush the nebulizer with distilled water and let it dry completely.
11. Reinstall the components.
12. Check aerosol generation and optimize the gas flow of the nebulizer, see page 41.

✓ Cleaning of the nebulizer is now complete.

## 6.4 Cleaning the spray chamber (standard Scott Chamber)



### Warning! Risk of injury!

There may be acid residues or other hazardous residues from sample material in the nebulizer and the spray chamber.

- Observe the corresponding information on hazardous materials.



### Warning! Sharp edges!

Glass parts may break when handled incorrectly and cause cutting injuries.

- Proceed with due caution and/or take appropriate safety precautions (e.g., wear gloves).

To clean the spray chamber, proceed as follows:

1. Flush the sample introduction system for approx. 10 minutes with a suitable blank solution, e.g., distilled water for aqueous applications.
2. Switch off the plasma.
3. Loosen the Ar connection of the nebulizer.
4. Loosen the clamp between the Plasma torch and the spray chamber.
5. Carefully pull off the spray chamber.
6. Remove the spray chamber.
7. Separate the nebulizer from the spray chamber by slightly twisting it.
8. Disconnect the waste water connection from the drainage of the spray chamber and remove the cap from the spray chamber by slightly turning it.

9. Clean the spray chamber.
   ➔ First, use a suitable diluted acid solution (e.g., hydrochloric acid or nitric acid 1:10).



**Hazardous substance!**

- Observe the corresponding information on hazardous materials.

   ➔ After this, use a laboratory cleaning agent for removing traces of fatty substances (streaks) if required.

   ➔ Now flush the spray chamber thoroughly with distilled water.

10. Reinstall the components.
11. Optimize the nebulizer gas flow, see page 42.

✓ Cleaning of the spray chamber is now complete.

## 6.5 Checking the aerosol formation of the nebulizer

In order to proceed with the inspection, follow the steps below:

1. Remove the nebulizer, see page 39, but without disconnecting the argon connection.
2. Call up the “Solid State Generator” menu item via the instrument control parameter dialog.
3. Adjust the nebulizer gas flow determined for the nebulizer.
4. Using a spray bottle, force distilled water through the nebulizer connection for sample introduction.
   ➔ The spray coming out must be evenly V-shaped. If this is not the case, the nebulizer may be clogged and must be cleaned, see page 39.

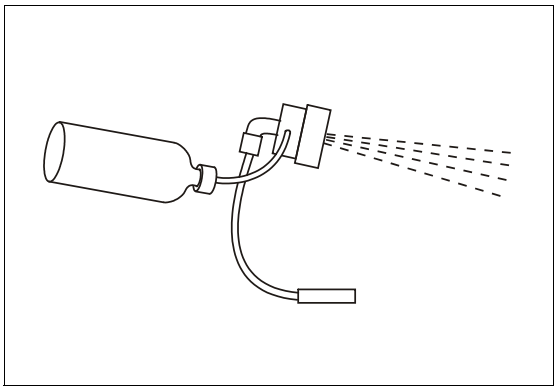

Fig. 16

5. Reinstall the components.

✓ Checking of aerosol generation is now complete.

## 6.6 Cleaning the load coil



### Warning! Hot surface!

The Plasma torch, plasma interface, and load coil may be very hot.

- Let the components cool for 10–15 minutes before commencing work on them.

The load coil may corrode because of the sample vapors.

In order to clean the coil, proceed as follows:

1. Switch off the instrument.
2. Remove the Plasma torch, see page 35.
3. Clean the load coil with a small brush (e.g. a toothbrush) and a grinding paste (e.g. toothpaste).
   ➔ Do not bend the load coil.
4. Remove the grinding paste completely from the load coil.
5. Reinstall the components.

✓ The load coil is cleaned.

## 6.7 Optimizing the nebulizer gas flow

In order to optimize the process, proceed as follows:

1. Call up the “Nebulizer Optimization” menu item via the instrument control parameter dialog.
2. Select a parameter set that suits the sample introduction system or solvent used.
3. Nebulize a solution that contains the specified elements in the defined concentrations (see the online Help).
4. Click the “Start” button in the dialog window.
   ➔ The instrument optimizes the nebulizer gas flow.

✓ Optimization of the nebulizer gas flow is now complete.

For additional information, refer to the online Help.

## 6.8 Cleaning the Side-On Plasma Interface (SPI)

### Notice! Damage to instrument!

- The induction coil is extremely sensitive.
  - ➔ Make sure not to strike the induction coil when removing the SPI.

In order to clean the SPI, proceed as follows:

1. Removing the SPI, see page 44.
2. Cleaning the lens and the SPI, see page 45.
3. Installing the lens and the SPI, see page 46.

## 6.8.1 Removing the SPI



### Warning! Hot surface!

- The plasma torch, plasma interface, and load coil may be very hot.
  - ➔ Let the components cool for 10 to 15 minutes before commencing work on them.

In order to remove the components, proceed as follows:

1. Switch off the plasma.
2. Loosen the argon connection (1).
3. Loosen and remove the clamp (4) from the spray chamber.
4. Remove the spray chamber (5).
5. Loosen the plasma torch (3) by turning the lever (2) counterclockwise.
6. Remove the plasma torch.

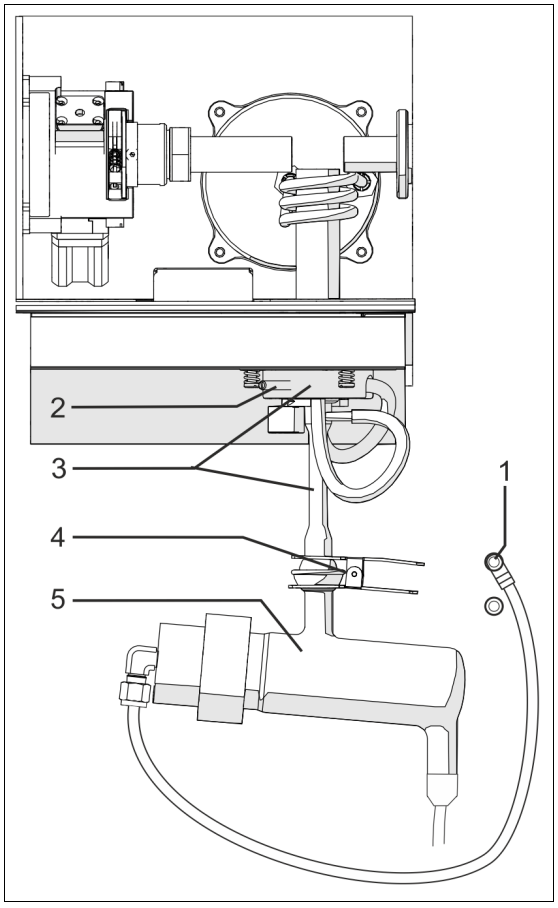


Fig. 17

7. The SPI has a latch (4), which is released by pushing it upwards (3).
8. Carefully pull the SPI (2) out of its bracket (1) to the front.
9. Remove the SPI from the torch housing.

✓ The removal of the SPI is now complete.

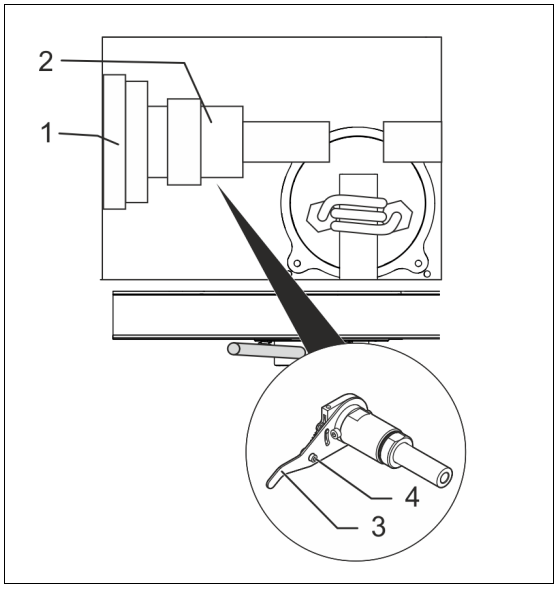

Fig. 18

## 6.8.2 Cleaning the lens and the SPI

**Notice! Instrument damage/measurement error!**

- The lens is scratch- and moisture-sensitive.
- If you touch the lens surface with your fingers, residues (e.g., grease) will stick to the lens surface. These residues are hard to remove.
  ➔ Check the lens for contamination.

When cleaning the lens, proceed as follows (if necessary):

1. Loosen the light channel sleeve (1).

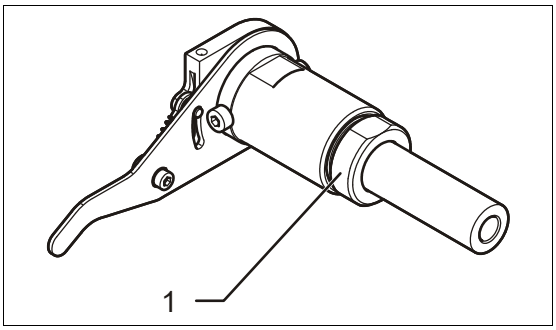

Fig. 19

2. Insert a clean 'peek' sample needle or similar type of object (1) through the opening in the back panel of the SPI (2).
3. Carefully push the lens (3) out on a piece of lens cleaning paper.

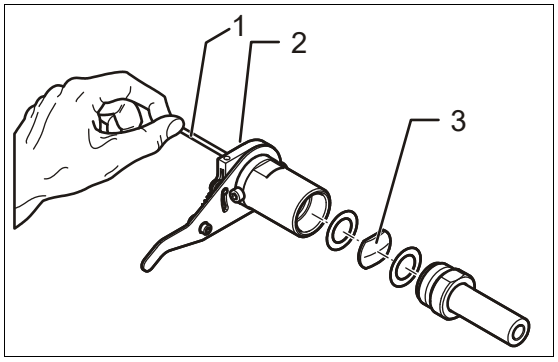

Fig. 20

4. Clean the contaminated lens using lens cleaning paper or a lint-free soft cloth.
5. Clean all the other parts with a lint-free cloth.

✓ The lens and SPI are now clean.

### 6.8.3 Installing the lens and the SPI

In order to fit it, proceed as follows:

1. Lay the PTFE ring (2) flat into the SPI (1).
2. Insert the lens (3) with the flat side into the SPI.
   ➔ The lens for the SPI (SOP application) can be distinguished by the straight edge on two sides.
3. Lay the second PTFE ring (4) on top of it.
4. Moderately tighten the light channel sleeve (5) including the light channel (6).

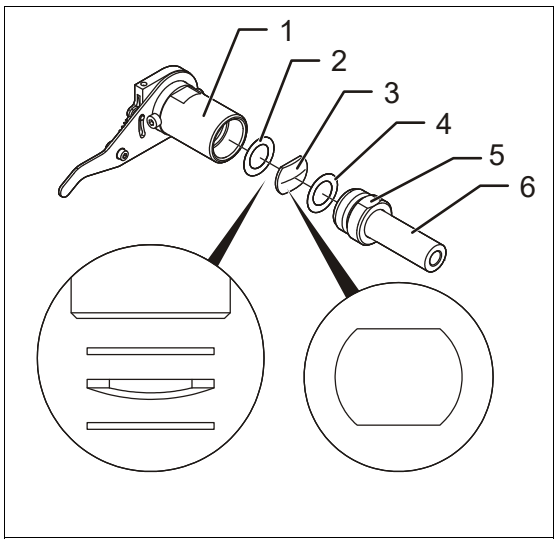

Fig. 21

5. Insert the SPI into the instrument following the reverse order used for the disassembly procedure.
6. Install the plasma torch and adapter, see page 35.

✓ The lens and SPI are now installed.

## 6.9 Cleaning the optical plasma interface (OPI) (EOP only)

### Caution! Damage to instrument!

- The load coil is very sensitive.
  - ➔ Make sure not to hit the load coil when removing the OPI.

Proceed as follows to clean the OPI:

1. **Removing the OPI**, see page 47.
2. **Cleaning the sampler**, see page 48.
3. **Cleaning the lens**, see page 49.
4. **Installing the lens and the OPI**, see page 50.

### 6.9.1 Removing the OPI

### Warning! Hot surface!

- The plasma torch, plasma interface, and load coil may be very hot.
  - ➔ Let the components cool for 10 to 15 minutes before commencing work on them.

In order to remove the components, proceed as follows:

1. Switch off the plasma.
2. Loosen the argon connection (5).
3. Loosen and remove the clamp (2) from the spray chamber.
4. Remove the spray chamber (4).
5. Loosen the plasma torch (1) by turning the lever (3) counterclockwise.
6. Remove the plasma torch.

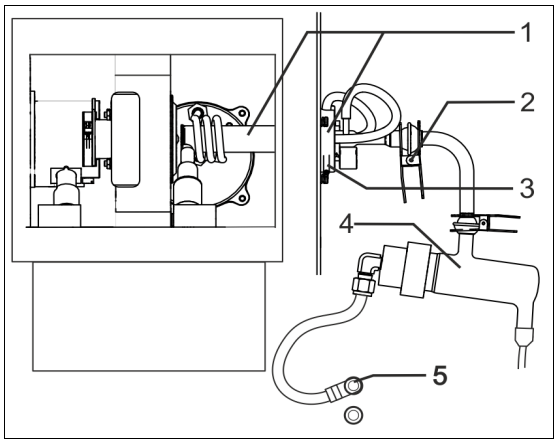

Fig. 22

7. The OPI has a latch (1), which is released by moving it upwards (2).
8. Carefully pull the OPI at the handle (3) to the front (4).
9. Remove the OPI from the torch housing.

✓ Removal of the OPI is now complete.

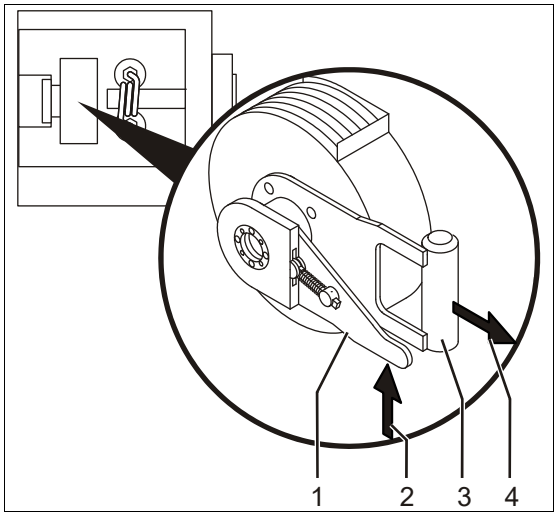

Fig. 23

## 6.9.2 Cleaning the sampler

In order to clean the sampler, proceed as follows:

1. Unscrew the sampler (2) from the OPI (1), using the OPI tool (3).
   ➔ Hold the front side of the OPI down. This prevents dirt particles from falling into the OPI.

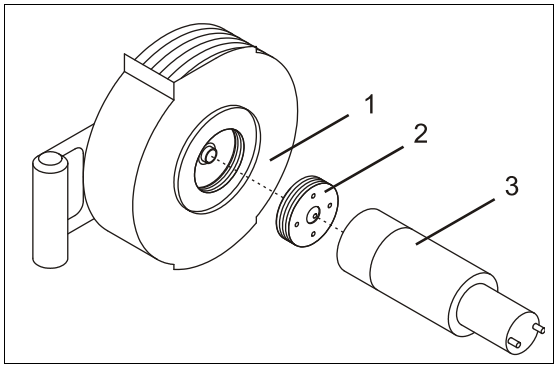

Fig. 24

2. Clean the sampler under running water using a nailbrush.
   ➔ When heavy contamination must be removed, a suitable acid may be used. Then flush the sampler thoroughly with distilled water.
3. Clean the sampler opening, e.g. using a pipe cleaner.
4. Let the sampler dry by the jet of air or argon.
5. Reinstall the sampler (2).

✓ Cleaning of the sampler is now complete.

### 6.9.3 Cleaning the lens

**Notice! Instrument damage/measurement error!**

- The lens is scratch- and moisture-sensitive.
- If you touch the lens surface with your fingers, residues (e.g., grease) will stick to the lens surface. These residues are hard to remove.
  - ➔ Check the lens for contamination.

When cleaning the lens, proceed as follows (if necessary):

1. Loosen the retaining collar (1) at the rear using the OPI tool (2).

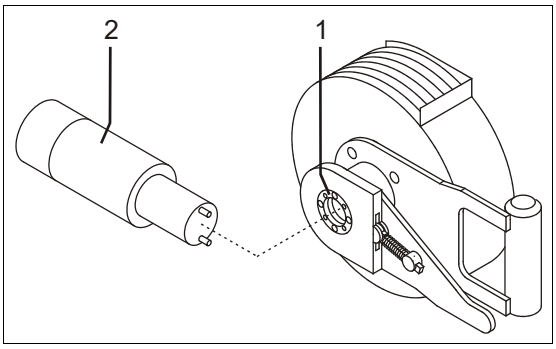

Fig. 25

2. Insert a clean 'peek' sample needle or similar type of object (1) through the sampler opening from the opposite side.
3. Carefully push the lens (2) out on a piece of lens cleaning paper.

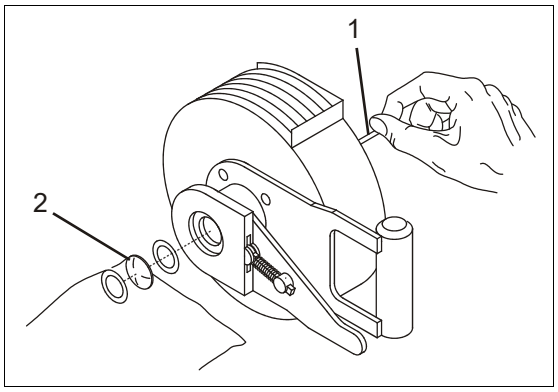

Fig. 26

4. Clean the contaminated lens using lens cleaning paper or a lint-free soft cloth.

✓ Cleaning of the lens is now complete.

## 6.9.4 Installing the lens and the OPI

In order to fit it, proceed as follows:

1. Lay the Teflon ring (5) flat into the OPI (6).
2. Then insert the lens (4) with the flat surface into the OPI.
   - ➔ The lens for the OPI (EOP application) can be distinguished by its straight edge on one side.
3. Lay the second Teflon ring (3) on top of it.
4. Screw the adjusting collar (2) moderately tight, using the tool (1).

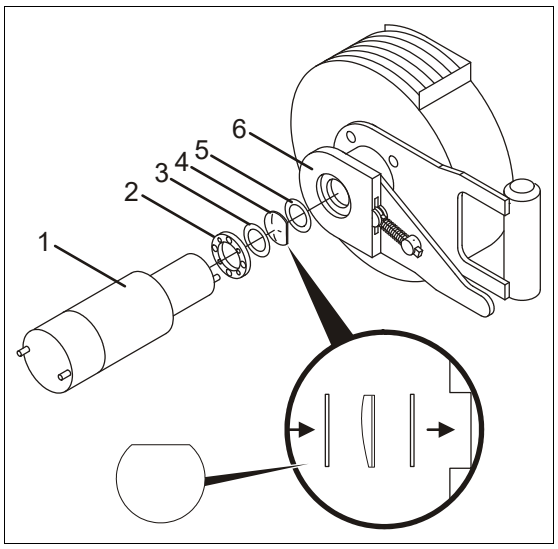

Fig. 27

5. Insert the OPI into the instrument following the reverse order used for the disassembly procedure.
   - ➔ There is an O-ring inside the OPI support flange. Make sure that the O-ring is clean and sits inside the notch.
6. Install the plasma torch and adapter, see page 47.

✓ Installation and cleaning of the OPI is now complete.

## 6.10 Cleaning of the fused silica window for radial observation of the Twin Interface

### 6.10.1 Removing the window

The OPI and the plasma torch must be removed to be able to remove the window.

The window is located in the mount (1). It has a spring lock and can be removed by turning it slightly to the front.

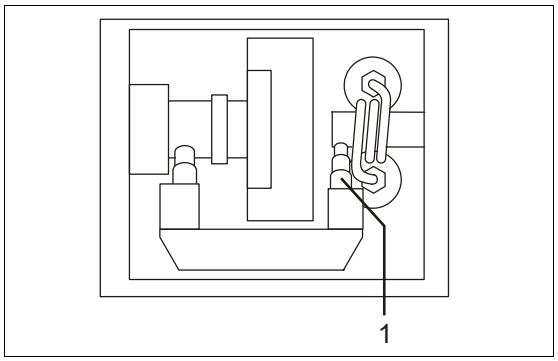


Fig. 28

To clean the quartz glass window, proceed as follows:

1. Demount the glass tube (1).
   - ➔ Remove the glass tube (1) from the mount (2) by turning/pulling slightly.
2. Remove the window (3).
   - ➔ The window (3) is located at the lower end of the mount and held in place by an O-ring (4). Remove the O-ring (4) very carefully using a pointed object. Ensure that the surface is not damaged.

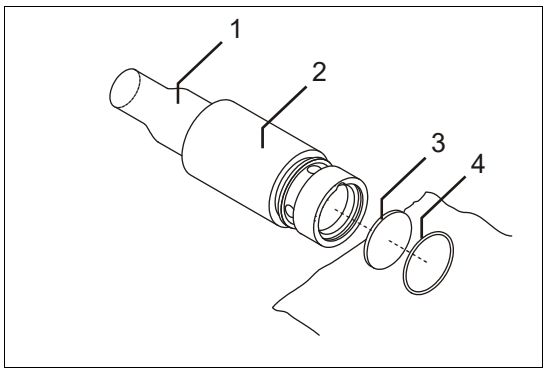


Fig. 29

3. Carefully place the window on lens cleaning paper.
4. Clean the soiled window with lens cleaning paper or a lint-free, soft cloth. Use isopropyl alcohol (supra pur), if necessary.

✓ The window is clean.

## 6.10.2 Fitting the window

In order to fit it, proceed as follows:

1. Guide the window (3) into the mount
2. Fit the O-ring (4) half-way into the groove. Ensure that the O-ring is clean and free of grease.
3. Hold the O-ring in this position with one finger and carefully fit it in the seal seat using a fine tool.

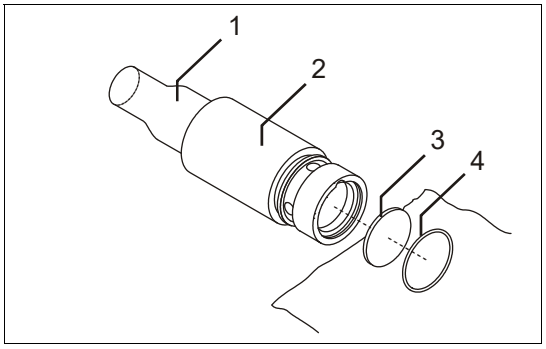


Fig. 30

4. Fit the window back into the instrument by applying the dismantling sequence in reverse order.

   ➔ Wear suitable laboratory gloves to avoid contamination.

✓ The window is installed.

## 6.11 Pump tubing maintenance

Damaged or worn pump tubings adversely affect the performance of the instrument. Therefore, the tubings must be checked at regular intervals (each time before starting work) and replaced as necessary.

In order to replace the tubing, proceed as follows:

1. Flush the sample introduction system for approx. 10 minutes with a suitable blank solution, e.g., distilled water for aqueous applications.
2. Switch off the plasma.
3. Loosen the pressure clamps of the peristaltic pump and relieve the pump tubings by removing them from the retaining clamps.
4. Fold the pressure clamps aside, disconnect the tubing from the pump head and remove the connected capillary tubes.
5. Connect the capillary tubes with the new pump tubing.

   ➔ While doing so, observe the correct inside diameter. The required inside diameter and consequently the pumping capacity depends on the nebulizer used. The following applies to the Cross-Flow nebulizer included in the scope of supply as a standard item:

   - Sample introduction channel: Inside diameter 0.89 mm; 0.035" (Orange-orange stops).
   - Outlet channel: Inside diameter 1.8 mm; 0.071" (Blue-green stops).
6. Put the tubings around the pump head, attach the stops to the retainer brackets and close the pressure clamps.
7. The pressure is set as follows, using the adjusting screws:

   I. Switch on the pump and aspirate a suitable blank sample, e.g., distilled water for aqueous applications.

   II. Select the Analysis view. Activate the pump by clicking on the "Pump" button.

   III. Loosen the adjusting screws until no liquid is pumped any more.

   IV. Now increase the pressure until the pump just starts pumping liquid.

   V. Adjust the correct pressure by tightening the respective adjusting screw by half a turn.

✓ Replacement of pump tubing is now complete.

# 7 Troubleshooting

## Notice! Damage to instrument!

Improperly performed repairs may damage the instrument.

- Do not repair the instrument yourself. Always notify your immediate supervisor or contact your Service Center.

| Malfunction | Cause | Remedy |
|---|---|---|
| System information:<br>Argon pressure too low. | Argon supply interrupted. | Check the argon supply.<br>Check the argon inlet pressure. |
| System information:<br>Cooling, auxiliary, nebulizer power deviation. | Argon supply of the plasma torch or the nebulizer faulty. | Check the locking mechanism of the plasma torch.<br>Check the connection of the nebulizer. |
| System information:<br>The torch chamber cover is open. | The torch chamber cover is not properly closed. | Close the torch chamber cover; check door mechanism, if necessary. |
| System information:<br>Plasma exhaust air system is defective. | The extraction capacity via the plasma is too low. | Check the instrument filter for contamination and/or check the extraction capacity. |
| System information:<br>Housing exhaust air system is defective. | Housing extraction capacity (rear exhaust air connection point) too low. | Check the instrument filter for contamination and/or check the extraction capacity. |
| System information:<br>Fault with generator overcurrent. | Overcurrent when starting the plasma. | Check set output. Repeat the starting procedure. |
| System information:<br>Safety circuit error or faulty torch box temperature. | Torch housing overheated. | Let the instrument cool down.<br>Check the plasma torch for carbon buildup.<br>Check exhaust air. |
| System information:<br>Internal fault with temperature. | Generator overheated. | Check the instrument filter for contamination and/or check the extraction capacity.<br>Check the room temperature. |

| Malfunction | Cause | Remedy |
|---|---|---|
| System information:<br>HF adjustment faulty. | Unfavorable starting conditions. | Check the sample introduction system; flush the system, and restart the plasma. |
| System information:<br>The plasma is extinguished. | Analytical load too high. | Check whether the adjustable parameters harmonize with the selected method. |
| System information:<br>Plasma does not ignite. | Plasma torch is contaminated.<br>Coil geometry faulty. | Check the plasma torch; clean if necessary.<br>Check the position and the geometry of the coil, align if necessary. |
| Plasma torch is melting. | Plasma torch is incorrectly positioned inside the induction coil. | Check whether the plasma torch is positioned correctly. |
| | Aerosol tube clogged. | Clean plasma torch |
| | Leak in argon connection to the plasma torch. | Check the O-rings for sealing the plasma torch and replace them, if necessary. |
| | Auxiliary gas flow set too low. | Increase auxiliary gas flow. |
| | Leak in nebulizer system. | Localize leak using soapy solution and seal the leak. |
| Plasma cannot be ignited. | No Tesla coil spark. | Fault with insulation for torch holder (service). |
| | Plasma torch not correctly centered within the load coil. | Check the load coil setting. |
| | Oxygen in sample introduction system. | Purge the sample introduction system with argon. |
| | Wrong argon quality. | Argon quality of 4.6 or higher is required (purity of 99.996 % or higher). |
| Asymmetrical plasma. | Argon flushing from the SPI too high. | Reduce the flow rate. |
| | Plasma chamber extraction set too high. | Reduce the extraction capacity. |

| Malfunction | Cause | Remedy |
|---|---|---|
| Plasma flickers or pulsates. | Moisture or deposits in the aerosol tube of the plasma torch. | Clean and dry the plasma torch or replace it. |
| | Aerosol pulsates (deposits in nebulizer). | Clean the nebulizer.<br>Replace the pump tube. |
| Plasma too bright. | Power set too high. | Decrease power. |
| | Oxygen in sample introduction system. | Check for leaks and eliminate these. |
| Plasma extinguishes when nebulizer gas flow is switched on. | Sample introduction tube not connected to the nebulizer. | Connect the tube and check fitting |
| | Oxygen in sample introduction system. | Flush the system with argon before restarting system. |
| | Leak in the sample introduction system. | Check for leaks and eliminate these. |
| No channel visible in the plasma. | Nebulizer gas flow setting too low. | Optimize the nebulizer gas flow. |
| | Nebulizer clogged. | Clean the nebulizer. |
| | Leak in spray chamber outlet. | Check for leaks and eliminate these. |
| System information:<br>Waste container is full. | Waste container full. | Remove the cover of the container and properly dispose of the content. |
| Sparkover at load coil. | Humidity. | Switch off the generator and use a paper towel to dry the load coil (if moisture is visible). |
| | Dirt on the load coil. | Switch off the generator and clean the load coil. |

| Malfunction | Cause | Remedy |
|---|---|---|
| System information:<br>Wavelength calibration failed. | Wrong sample or wrong preflush time. | Use the correct sample. Check the measurement parameters. Repeat the wavelength calibration. |
| System information:<br>Network connection<br>No communication between the PC and the instrument. | Spectrometer not switched on.<br>Address incorrect or used for a different purpose.<br>Data cable not plugged in or defective. | Check main switch.<br>Enter the correct IP address (online help). Only qualified IT staff are permitted to enter the address.<br>Check cable. |

# 8 Spare parts and consumables

You can find the spare parts and consumables for this instrument under "Support - Parts Catalogue" (Service – Parts Catalogue) on our website at www.spectro.com.

Use only genuine spare parts for repairing the instrument. The use of non-genuine spare parts will make the CE Declaration of Conformity null and void. Excepted are spare parts from manufacturers approved by SPECTRO.

Only the use of genuine spare parts and consumables ensures the safe operation and achievement of the specified output. This applies especially to all components of the sample introduction system and, in particular, to the Plasma torch.

# 9 De-commissioning

Only organizations or persons authorized by the instrument manufacturer shall be permitted to de-commission the instrument. Please contact your Service Center.

# 10 Manufacturer address

SPECTRO Analytical Instruments GmbH

Boschstr. 10

D-47533 Kleve

Germany

Tel.: +49.2821.8 92-0

Fax: +49.2821.8 92-22 00

http://www.spectro.com