SPECTROLAB



Stationary metal analyzer

Original operating instructions

SPECTRO

Table of Contents

1 Description of instrument 5
1.1 Description 5
1.2 Function 5
1.3 Overview 6
1.3.1 Unit (left side) 6
1.3.2 Instrument (right-hand side) 7
1.3.3 Instrument (inside) 8
1.3.4 Instrument (back) 9
1.3.5 Spark stand 10
2 Safety 11
2.1 Symbols used 11
2.2 User information 12
2.3 Intended use 13
2.3.1 Samples 14
2.3.2 Preparing the Sample 14
2.3.3 Sample material 15
2.3.4 Sample weight 15
2.3.5 Gas cleaning cartridge 16
2.3.6 Spark stand 16
2.3.7 Sample clamp 16
2.3.8 Gas supply 17
2.4 Prohibited operating conditions 17
2.5 Residual risks 18
3 Technical data 20
4 Transportation/Setting-up 21
4.1 Space requirements 22
4.2 Storage 22
4.3 Gas supply 23
5 Initial start-up 24
5.1 Preparing the instrument for use 24
6 Operation 25
6.1 Overview of controls 25
6.2 Switching on the instrument 26
6.2.1 Argon saving module 26
6.3 Switching off the instrument 27

6.4 Measuring procedure ... 28
6.4.1 Preparing the measuring procedure ... 29
- iCALising the measuring device (iCAL) ... 29
- Standardizing the measuring device (optional) ... 30
- Changing the base (multi-base instruments only) ... 30

6.4.2 Start the measurement ... 31

7 Maintenance ... 32
7.1 Maintenance Reminder ... 32
7.2 Maintenance schedule ... 33
7.3 Cleaning the UV optics light inlet window ... 34
7.4 Cleaning the spark stand ... 37
7.5 Cleaning the exhaust filter system and changing the filter insert ... 42
7.6 Inspecting the gas-washing bottle ... 45
7.7 Replacing the filter mats ... 47
7.8 Replacing the ICALization sample ... 48
7.9 Replacing the standardization sample ... 48

8 Status messages ... 49

9 Troubleshooting ... 50
9.1 Error messages ... 52
9.2 Diagnosis tool ... 53

10 Spare parts and consumables ... 54

11 De-commissioning ... 54

12 Manufacturer address ... 54

1 Description of instrument

1.1 Description

Instrument:	SPECTROLAB
Model:	LAS01
Type/Part No.:	76004143

1.2 Function

Sample material is evaporated by spark discharge inside the unit. In this process, the released atoms and ions are excited and emit light. This light is directed into the optical systems and measured using sensors.

Calibration data are already stored in the unit's memory. The measured values are compared with these data. The measured values are converted into concentrations and then displayed on the screen.

1.3 Overview

1.3.1 Unit (left side)

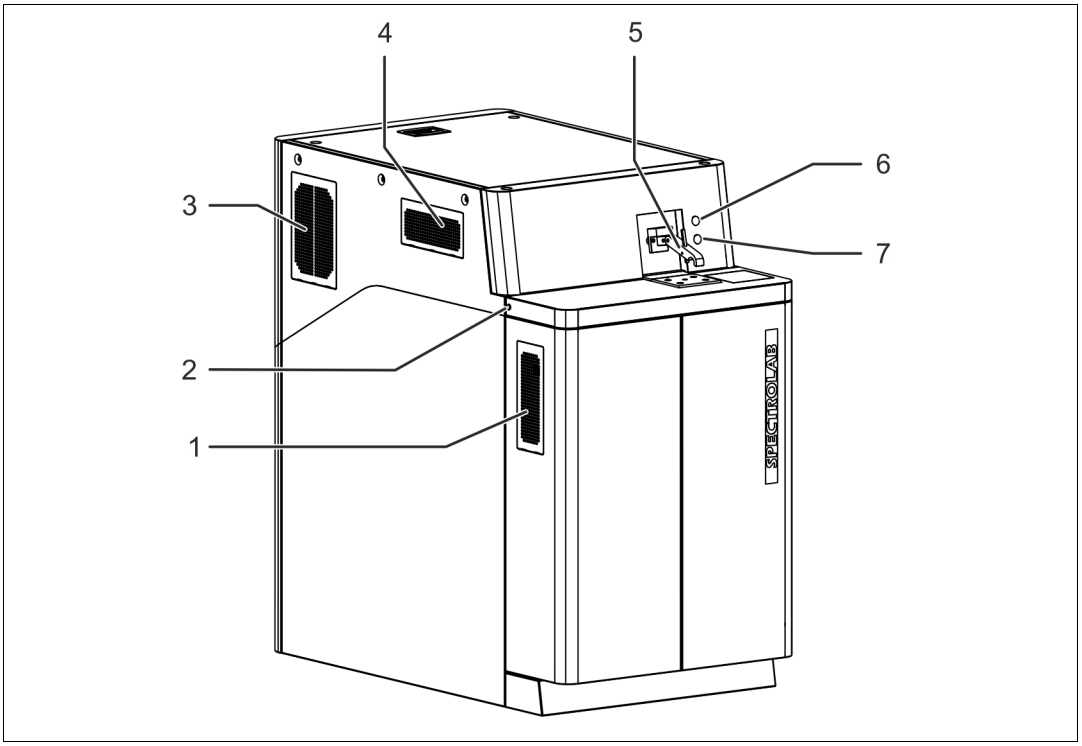

Fig. 1

No.	Component
1	Filter mat spark excitation (plasma generator)
2	Unlocking mechanism for protective cover
3	Filter mat for cooling system
4	Filter mat electronic room

No.	Component
5	Sample clamp
6	Start/Stop measurement
7	On/Off switch spark excitation (plasma generator)

1.3.2 Instrument (right-hand side)

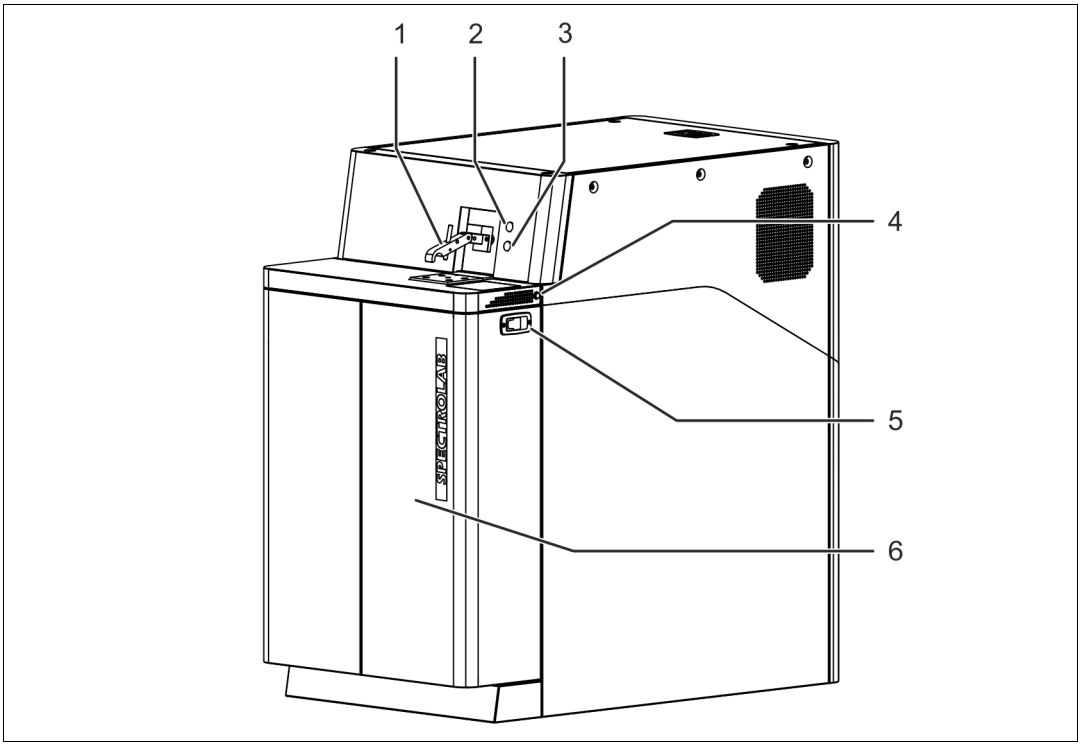

Fig. 2

No.	Component
1	Sample clamp
2	Start/Stop measurement
3	On/Off switch Spark excitation (plasma generator)
4	Unlocking mechanism for protective cover

No.	Component
5	Door opener
6	Access to the setting gage electrode, Allen key, wash bottle and filter bottle (inside the instrument)

1.3.3 Instrument (inside)

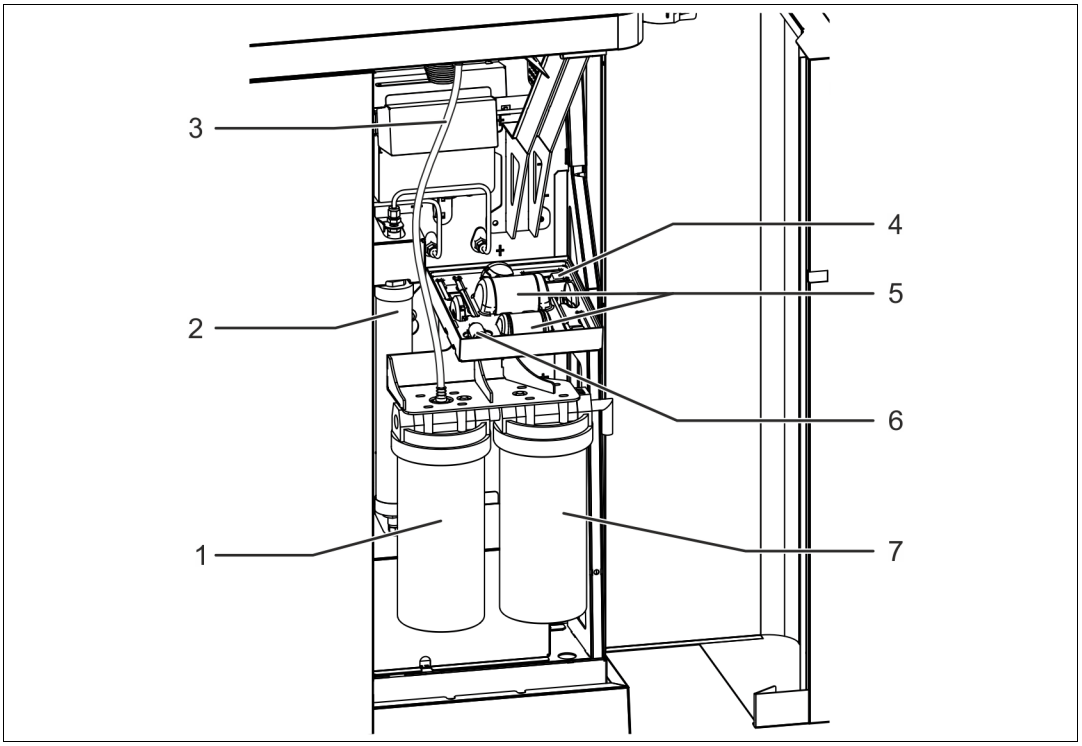

Fig. 3

No.	Component
1	Gas-washing bottle
2	Gas cleaning cartridge Notice! Only qualified personnel shall be permitted to change the cartridge.
3	Exhaust hose
4	Allen key for electrode holder

No.	Component
5	ICAL sample(s)
6	Setting gage electrode
7	Filter bottle

1.3.4 Instrument (back)

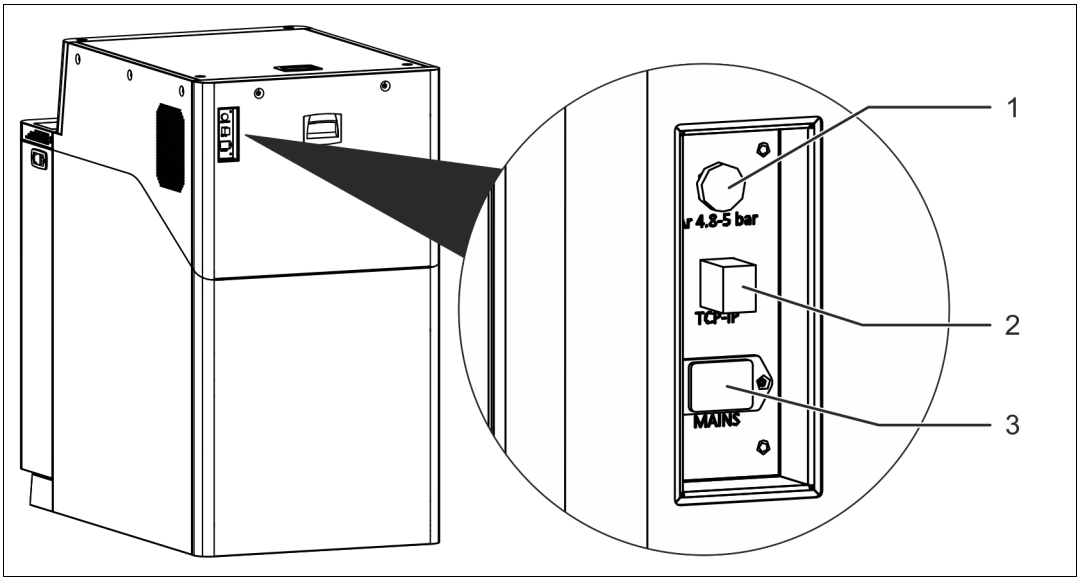

Fig. 4

No.	Component
1	Argon connection
2	PC data transmission connection

No.	Component
3	Mains connection socket

1.3.5 Spark stand

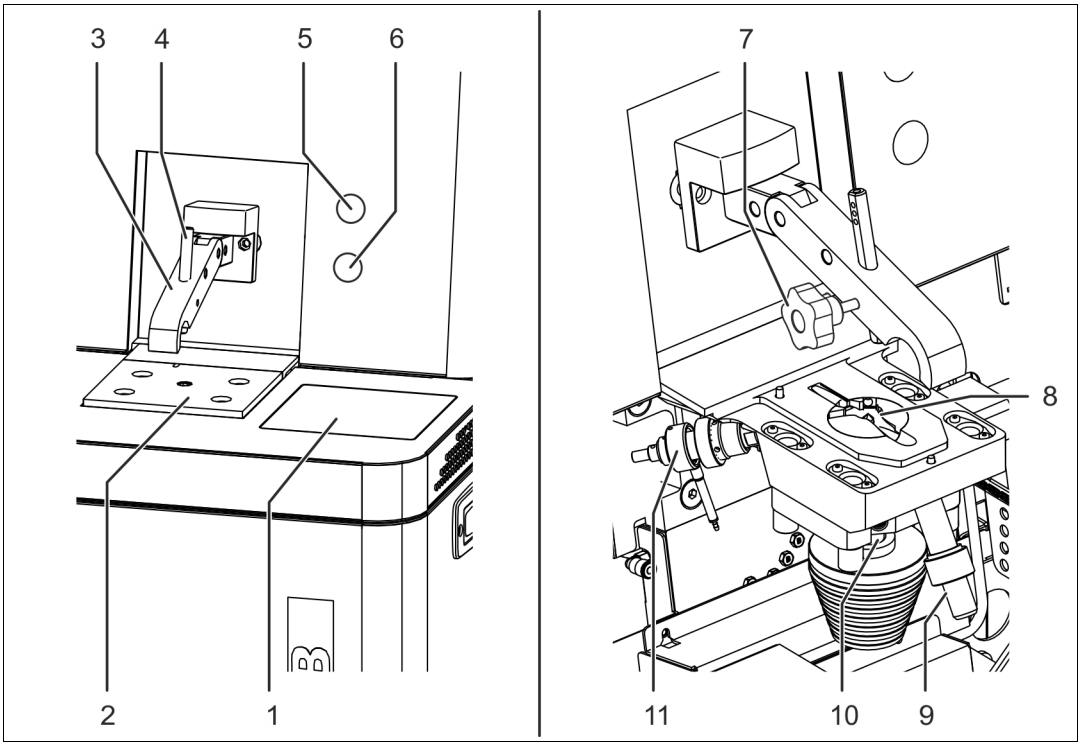

Fig. 5

No.	Component
1	Access to electrode clamp
2	Sparky stand plate
3	Clamp (swinging)
4	Contact (movable)
5	Start/Stop measurement
6	On/Off switch for spark excitation (plasma generator)

No.	Component
7	Locking wheel for contact
8	Electrode and spark stand insert
9	Outlet to filter system
10	Electrode holder
11	Holder for fiber-optics to air optics

2 Safety

Every user of the instrument must have read and understood these operating instructions. This applies in particular to the safety instructions.

2.1 Symbols used

The following symbols are used in these abbreviated operating instructions and/or on the instrument.

If required, additional important information is available in connection with these symbols.



General warning sign!



Warning! High voltage!



Warning! Flammable substances!



Warning! Hot surface!



Warning! Toxic substances!



Warning! Optical radiation!



Warning! Risk of hand injury!



Warning! Risk of suffocation!

Notice!

This sign warns of activities or conditions that may adversely affect the function of the instrument.

Information

Displays information that is important for the correct and safe use of the instrument.

2.2 User information

- Non-compliance with the operating and safety instructions may lead to injuries and can cause a health hazard.
- Carefully read the manual and always comply with the safety instructions.
- If the instrument is located on an incline and equipped with castors, it can roll away during operation. Secure the instrument for operation. This applies also when the instrument is being transported.
- Only service personnel authorized by the manufacturer are permitted to unpack, install, set up and connect the instrument.
- The instrument must only be connected to the mains power supply with a protective grounding conductor. The instrument may be operated only in a dry environment (protection class IP 20, DIN 40050).
- Disconnect the power plug before opening the instrument. The instrument is only completely disconnected from power if the power plug is removed.
- Never tamper with the safety devices! If it is suspected that a safety device does not work properly, shut down the instrument immediately. Please contact your Service Center.
- Compliance with the information labels on the instrument is mandatory.
- While operating and maintaining the instrument, compliance with all safety instructions and accident prevention regulations is mandatory.

- Compliance with the relevant safety regulations for the use of auxiliary aids and operating equipment is mandatory.
- Carry out only those maintenance tasks that is described in the chapter "Maintenance" of the operating instructions. The operating personnel are not permitted to perform any other maintenance work. Any further services (e.g. technical maintenance) or repairs must only be performed by service personnel that are authorized by the manufacturer.
- Check the protective measures after every technical maintenance or repair activity. The checking procedure is carried out in accordance with DGUV V3 (German Social Accident Insurance) or an equivalent national regulation.
- Compliance with the maintenance schedule specified by the manufacturer and the recording of all maintenance activities is mandatory. This helps maintain the operational safety of the instrument.
- Only genuine spare parts must be used when repairing the instrument. If using components other than OME parts, the CE Declaration of Conformity shall be null and void.

2.3 Intended use

This instrument analyzes and identifies metals. Only such metals may be analyzed for which the instrument has been calibrated by the manufacturer or by qualified technical personnel.

Only the original accessories supplied with the instrument must be used and shall only be used indoors (laboratory environment).

The instrument is intended for use in the industrial sector. Electromagnetic interference may occur during the operation of the instrument. In this case, the manufacturer must be contacted.

2.3.1 Samples

Only dry metal samples must be measured.



Warning! Risk of injury and health hazard!

Risk of injury and health hazard due to pressurized or combustible samples.

- Pressurized or flammable samples must not be measured.

2.3.2 Preparing the Sample





Warning! Harmful and toxic substances!

During the preparation of samples, e.g. during the grinding process, toxic vapors and toxic clouds of dusts may be generated, depending on the sample material.

- When disposing of these dusts, compliance with legal regulations and fire prevention instructions is mandatory.
- The operating company of the spectrometer shall be responsible for compliance with the limit values of the maximum permissible pollutant concentrations in the breathing air.
- During the preparation, compliance with the safety instructions provided by the manufacturer of the sample preparation machine is mandatory. Personal protective equipment must be worn.
  When preparing samples that could potentially release toxic substances, wearing protective goggles and the use of appropriate respiratory protection equipment is mandatory.

2.3.3 Sample material





Warning! Toxic substances!

- The sparking process produces a black precipitate (metal condensate). The condensate could be toxic or flammable, depending on the sample material. Metal vapors may be generated by sparks of the sample material. Depending on the sample material, these vapors may be toxic, e.g. if using heavy metals or other hazardous metals during the test.
  - ➔ Protective gloves and safety goggles must always be worn when cleaning the spark stand and when cleaning the gas-washing bottle or the filter bottle. This also applies when replacing the filter insert. If metals with toxic components have been sparked off, wearing a breathing mask to prevent the inhalation of condensate particles is mandatory.
  - ➔ When disposing of the condensate, compliance with legal regulations and fire prevention instructions is mandatory.
  - ➔ If the samples contain toxic substances, an extraction system must be installed at the spark stand.
  - ➔ In this case, the gas escaping from the spectrometer's exhaust pipe must be channeled to the outside of the building.
  - ➔ The installation of an extraction system and the discharge of the exhaust gas into the open air makes it easier to comply with the maximum permissible pollutant concentrations in the breathing air below the applicable limit values, MAK values (*Maximale Arbeitsplatzkonzentration*: maximum workplace concentration), as well as workplace limit values and biological limit values or comparable national regulations. Compliance with these limits is the sole responsibility of the owner of the spectrometer. If samples with toxic components must be measured, further protective actions such as wearing breathing protection may be necessary.

2.3.4 Sample weight

The weight of the sample to be measured must not exceed 15 kg (33 lbs).

2.3.5 Gas cleaning cartridge

The instrument contains a gas cleaning cartridge.

Only a qualified technician shall be permitted to change the gas cleaning cartridge.



Warning! Toxic substances!

The content of the gas cleaning cartridge is toxic.

- Compliance with the safety data sheet is mandatory. To request the data sheet, go to http://MSDS.spectro.com.

2.3.6 Spark stand

The opening of the spark stand plate must be completely covered by the sample or the respective adapter.



Warning! Optical radiation!

The plasma in the spark stand generates UV radiation. UV radiation may cause damage to the eyes or skin.

- For samples that do not completely cover the spark stand opening, use the respective sample adapters in such a way that the opening is completely closed.
- Take appropriate protective measures (e.g. wear safety goggles) when the spark stand opening is not fully covered.

2.3.7 Sample clamp

The sample clamp must have contact with the sample (the safety device is activated).



Warning of hazardous voltage!

The sample clamp provides the contact between the sample and the spark stand. There is a risk of suffering an electric shock when handling the sample clamp.

- Never tamper with the sample clamp.



Warning of hand injury!

Springs are used to keep the sample clamp in position. However, the clamp may fold down unexpectedly. If your hand is caught underneath the clamp, this may cause injuries.

- Never place your hand under the sample clamp.

2.3.8 Gas supply



Information! Measurement errors!

Impurities in the argon supply cause measuring errors.

- Ensure the installation of the argon supply line is free of oil and grease.

Only argon must be used when operating the instrument.

Argon quality (min.)	4.8 (99.998% Ar) with O_2<3ppm, N_2<10ppm, H_2O<5ppm, kV<1ppm Argon of higher purity or gas pre-purification is required for a nitrogen/oxygen analysis.

The spectrometer requires an argon supply line.

A suitable pressure reducer is required for the argon supply (bottles or liquid gas tank).

- Adjustable output pressure 0 - 10 bar
- The argon inlet pressure at the instrument is 4.8 – 5.0 bar (69.6 – 72.5 psi)

2.4 Prohibited operating conditions

Do not operate the instrument if one of the following conditions exists:

- If the instrument is faulty or damaged.
- If the ambient conditions do not comply with the specification.
- If the area where the instrument is used is not a commercial/industrial premise.

2.5 Residual risks

This instrument has been manufactured in accordance with the latest state-of-the-art technology. Residual risks cannot be completely excluded, however.



Notice!

- The light inlet window of the air optics is located below the spark stand.
  - ➔ Protective gloves must be worn to prevent cuts and contact with metal condensate, which can be toxic, depending on the sparked material.
- The instrument is operated with argon. Argon is heavier than air. It can accumulate in a closed room, especially on the floor or lower-lying areas.
  - ➔ Ensure that adequate ventilation is provided. If necessary, install oxygen sensors.



Warning! Toxic substances!

The cooling system contains a coolant.

- The associated material safety data sheet is available at http://MSDS.spectro.com.



Warning! High voltage!

When the instrument is switched on, there is a risk of an electric shock when the electrode is touched or when the sample is removed during a measurement.

- Never touch the sample while a measurement is in progress.
- Avoid any contact with the electrode when the instrument is switched on.
- Shut down the source (plasma generator) during all work on the spark stand.



Warning! Hot surface!

- Contacting the electrode increases the risk of burn injuries. During normal operation, the electrode will heat up to several hundred degrees.
  - ➔ Never touch the electrode with your bare hands, even after shutting down the spectrometer. Always use pliers.
- A sample can get hot if it is measured several times.
  - ➔ Touch the sample only after it has sufficiently cooled.



Warning! Risk of suffocation!

- The instrument is operated with argon. Argon is heavier than air. It can accumulate in a closed room, especially on the floor or lower-lying areas.
  - ➔ Ensure that adequate ventilation is provided. If necessary, install oxygen sensors.



Information

A high-voltage pulse ignites the plasma. Subsequently, the burning voltage is applied to the electrode.

When the instrument is switched on, there is an inherent danger of an electrical emission during a spark test, especially if the sample is removed during the measuring process.

- ➔ For a healthy person, this electrical transmission is of no concern. These are electromagnetic fields of low intensity. Due to this transmission, the electromagnetic characteristics of the instrument may be outside the limits of EN61326-1 in some areas. As a result, interferences of radio transmissions can occur in the immediate (close) range of the spectrometer. This means, for example, interference during the reception of radio transmissions is possible (crackling, image disturbances).
- ➔ Users of life-sustaining or supporting medical devices (e.g., insulin pumps, pacemakers, defibrillators, EEG, ECG devices, etc.) should not be affected by CE-compliant instruments. For this group of operators, however, it is strongly recommended to contact the manufacturer of the instrument before using the spectrometer!

3 Technical data

Description	Value
Instrument height	1405 mm; 55.3"
Instrument width	770 mm; 30.3"
Instrument depth	1360 mm; 53.5"
Instrument weight	approx. 375 kg; ~ 826 lbs
Power supply	198 - 253 VAC, 50/60 Hz
Power during measurement	1.0 kVA
Power during stand-by	0.4 kVA
Supply voltage fuse	10 - 16 A
Operating range (permissible ambient temperature)	15°C – 30°C; 59°F – 86°F
Recommended temperature range to achieve the specified performance	18 to 30°C; 64 to 86°F
Place of installation	Inside of dry, dust-free rooms up to an altitude of 2000 m above sea level, vibration-free (not subject to impact or vibration load conditions)
Air humidity range	20 – 80%, not condensing
Sound pressure level	55 dB(A)
Argon inlet pressure on the instrument	4.8 to 5.0 bar (69.6 to 72.5 psi)
Argon quality (min.)	4.8 (99.998% Ar) with O_2<3ppm, N_2<10ppm, H_2O<5ppm, kV<1ppm Argon of higher purity or gas pre-purification is required for a nitrogen/oxygen analysis.
Argon flow rates	Spark stand flushing • Stand-by (low flow) 20 l/h • Constant flow 40 l/h • Analytic flow 180 - 900 l/h Type: Flow 230 l/h
Storage conditions	Ambient temperature -15 – 45°C; 5 – 113°F
Protection class / Contamination class	IP 20 (DIN 40050), contamination class II (laboratory environment)
EMC environment	Industrial environment / Laboratory environment

4 Transportation/Setting-up

Notice! Damage to instrument!

Improper transport may cause damage to the instrument or to other property within the surroundings.

- Only specifically trained personnel shall be permitted to transport the instrument in its transport packaging.
  - ➔ If the usage site must be changed, please contact our service department.
- Consider the dimensions and the weight of the instrument.
  - ➔ Ensure that the transportation route is free of obstacles and bottlenecks are avoided.
  - ➔ Since the instrument weighs approx. 375 kg, the structural properties of the transportation route and the load capacity of the place of installation must be considered.
- Only service personnel authorized by the manufacturer are permitted to unpack, install, set up and connect the instrument.

Information: Measurement errors!

- If the instrument is subject to vibrations and shocks, measurement errors may occur during the measuring process.
  - ➔ The instrument must be installed at a vibration- and shock-free location.
- Measurement errors can result from temperature differences inside the instrument.
  - ➔ The instrument must be installed at a location, where it cannot heat up or cool down on one side only.
- The instrument may be operated only in a dry environment (protection class IP 20, DIN 40050).

Observe the following information regarding the instrument's installation:

- All connections are located at the rear side.
- The instrument must be accessible from all sides for maintenance. Set up the instrument accordingly. Sufficient space should be provided for the computer workstation (keyboard, monitor, printer) and the operating personnel.
- The clearance to other objects should be at least 20 cm on all sides. In addition to the space required by the instrument, some space is needed for the gas supply, unless fixed gas connections are available.
- In order to disconnect the instrument from the power supply, access to the power cable of the instrument must be ensured at all times.

4.1 Space requirements

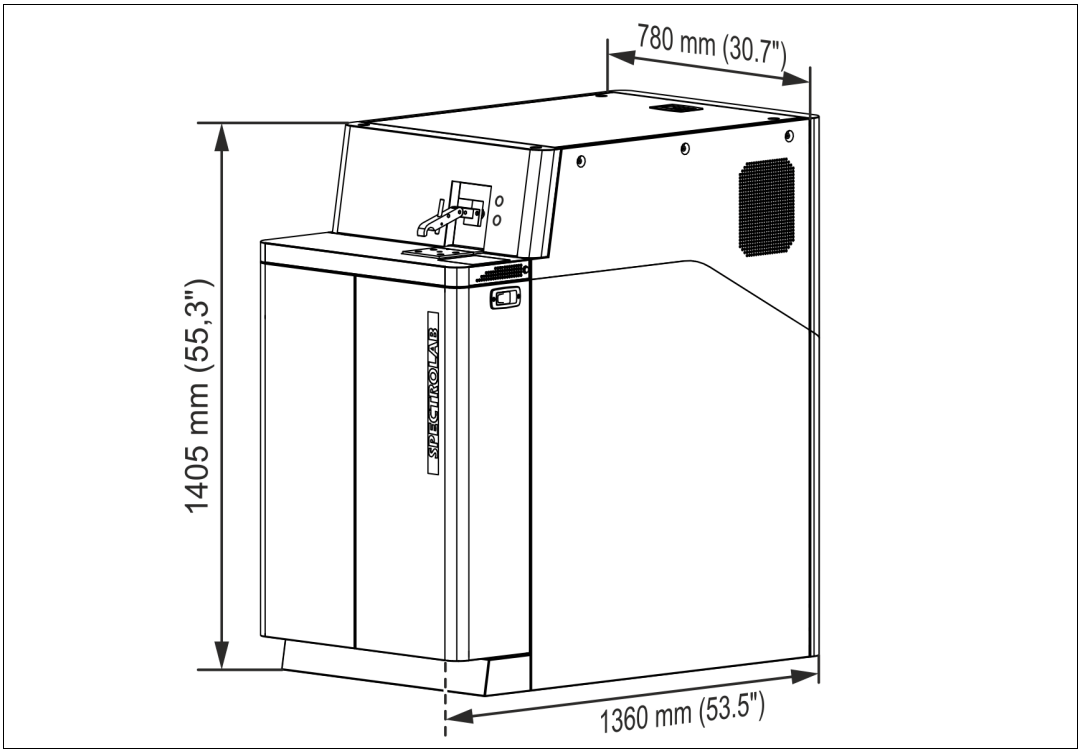

4.2 Storage

Storage conditions:

- The instrument must be stored in a dry place
- Room temperature -15°C – +45°C (5°F – 113°F)

4.3 Gas supply

Information: Measurement errors!

Impurities in the argon supply cause measuring errors.

- Ensure the installation of the argon supply line is free of oil and grease.

The spectrometer requires an argon supply line.

A suitable pressure reducer is required for the argon supply (bottles or liquid gas tank).

- Adjustable output pressure 0 - 10 bar
- The argon inlet pressure at the instrument is 4.8 – 5 bar (69.6 - 72.5 psi)
- The pressure reducer must be adjusted so that the maximum permissible inlet pressure of the instrument is not exceeded.

A copper tube for the argon supply is provided with the delivery of the SPECTRO:

- Diameter 6 x 1 mm, length 3 m

  ➔ When using longer lines and/or smaller tube diameters, a possible pressure drop must be taken into account.

This line is screwed to the connection on the rear panel of the instrument. The threaded connection is included in the scope of supply.

5 Initial start-up

5.1 Preparing the instrument for use

Before switching on the instrument, proceed as follows:

1. Check whether the power supply of the instrument supplies the correct input voltage.(198 - 253 VAC, 50/60 Hz).
2. Check if the mains voltage selector switch of the PC is set to the proper input voltage (230V/115V).
3. Check the filling level of the gas-washing bottle. Fill with water if required, see page 45.
4. Set the argon pressure to 4.8 - 5.0 bar (69.6 - 72.5 psi).
   - ➔ If the argon pressure is not properly set, turbulences result in the spark stand insert. Thus, correct measuring results cannot be obtained.

✓ The instrument is ready for use.

6 Operation

6.1 Overview of controls

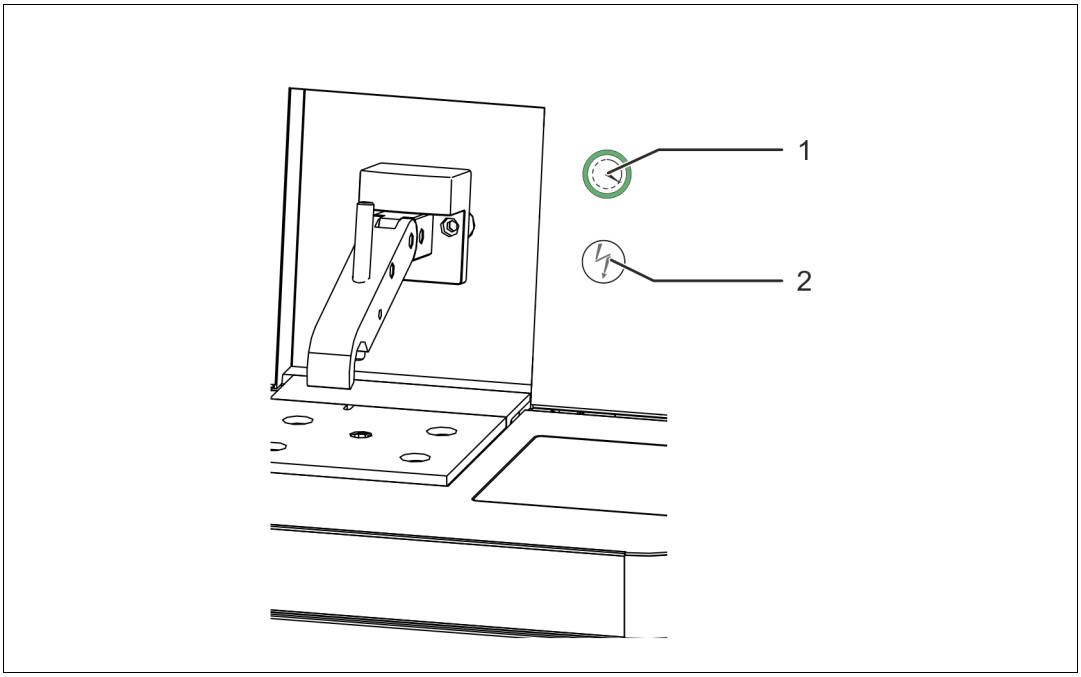

Fig. 6

No.	Control element	Function
1	Switch	Start/Stop measurement
2	Switch	Switches the plasma generator on/off, see chapter 6.2.

6.2 Switching on the instrument

Information

To operate the instrument in compliance with the specification, it should be stabilized after switching it on. After reaching the optical system's target temperature (20°C, 68°F), the system may require at least two hours to stabilize. When starting the instrument for the first time, it is recommended to rinse the instrument with argon for a longer period of time in order to remove any oxygen and moisture that have penetrated the system.

To switch on the instrument, proceed as follows:

1. Connect the instrument to the power supply.
2. In order to switch on the plasma generator, press the following buttons:



3. Switch on the computer.
   ➔ The operating system is booted.
4. After booting the operating system, start the “Spark Analyzer Pro LAB” spectrometer software.

✓ The instrument is switched on.

6.2.1 Argon saving module

The argon flow is deactivated by switching off the Plasma generator. This minimizes the overall argon consumption.

For restoring the readiness for measurements, flushing with the analytic flow is carried out.

When the argon flow is automatically activated again is determined in the "Argon saving module" screen dialog. Immediately thereafter, the instrument is ready for operation.

For a detailed description, refer to the online help of the instrument.

6.3 Switching off the instrument

Information

If the instrument was completely switched off, restarting may take some time as the optics need to reach the right temperature and the system must be flushed with argon.

It is recommended to leave the instrument connected to the power supply and to leave the argon supply line open all the time.

To switch off the instrument, proceed as follows:

1. Exit the spectrometer program "Spark Analyzer Pro LAB".
2. Select the dialog item "Shut down" and confirm the dialog field.
   - ➔ The program is shut down.
   - ➔ The computer is turned off.
3. In order to switch the instrument completely off, remove the power plug.

✓ The instrument is switched off.

6.4 Measuring procedure



Warning of hand injury!

Springs are used to keep the sample clamp in position. However, the clamp may fold down unexpectedly. If your hand is caught underneath the clamp, this may cause injuries.

- Never place your hand under the sample clamp.



Warning of hazardous voltage!

The sample clamp provides the contact between the sample and the spark stand. There is a risk of electric shock when handling the sample clamp.

- Never tamper with the sample clamp.



Warning! Hot surface!

A sample can get hot if it is measured several times.

- Touch the sample only after it has sufficiently cooled.



Warning! Optical radiation!

The plasma in the spark stand generates UV radiation. UV radiation may cause damage to the eyes or skin.

- For samples that do not completely cover the spark stand opening, use the respective sample adapters in such a way that the opening is completely closed.
- Take appropriate protective measures (e.g. wear safety goggles) when the spark stand opening is not fully covered.



Information

A flawed initial start-up, operation or sample preparation can lead to measurement errors.

- Therefore, ensure all necessary requirements for a correct measurement are met.

6.4.1 Preparing the measuring procedure



Information

An optimum measurement requires a good argon atmosphere inside the spark stand. Therefore, the opening of the spark stand must always be covered. This will make it more difficult for ambient air to enter the spark stand. A flat sample is highly recommended.

Oxygen and humid air inside the spark stand may result in poor burn spots (see Chapter 9 „Troubleshooting“).

In order to avoid oxygen penetration, the spark stand is flushed with increased argon flow as soon as the clamp is folded up

To remove oxygen from the spark stand, use the "Flush" button on the computer to invoke the flush function.

Before starting the measurement, proceed as follows:

1. Ensure that
   - ➔ the instrument is ICALized, see page 29,
   - ➔ the instrument is standardized (optional), see page 30, and
   - ➔ the correct and base-relevant parts have been installed, see page 30.
2. Check the spark stand and the sample for any moisture.
   - ➔ It is important that no moisture is visible on the outside.
   - ➔ If necessary, dry the sample.
3. If working with toxic samples, ensure to verify the safety precautions.

✓ The measurement is now prepared.

iCALising the measuring device (iCAL)

The iCALising procedure (standardizing using iCal) requires a reference sample. The average values of these measurement results are calculated and stored in the instrument.

In order to proceed with iCALization, follow the steps below:

1. Place a clean electrode in the spark stand, see page 39 ff.
2. Start the iCAL function by pressing the “iCAL” button.
3. Follow the instructions on the screen and perform the necessary measurements with the reference sample.
4. Poor measurements are highlighted in the ICAL measurement window and can be deleted. Please repeat the respective measurements.

✓ The instrument is iCALized.

Standardizing the measuring device (optional)



Information

Prior to any standardization, the instrument must be iCALized. In addition, a verification with certified standards must be performed after any standardization.

In order to standardize the instrument, proceed as follows:

1. Start the standardization function using the F7 function key.
2. Follow the instructions on the screen and perform the necessary measurements with the profiling samples.
   - ➔ Use the "Finish" button or press the respective function key to finish the respective sample.
   - ➔ After calculation of the standardization report, the standardization is terminated automatically.

✓ The instrument is now standardized.

Changing the base (multi-base instruments only)

When changing the base, the spark stand must be cleaned in order to avoid memory effects, see page 37.

- Change the spark stand insert, the electrode, and the electrode brush.

Preparation of the instrument for measuring another base is now complete.

6.4.2 Start the measurement

Information

Use the electrode brush in order clean the electrode tip after each measurement.

After 200 measurements, a brush must be used to clean around the electrode and to clean the bottom of the insert. A brush of the same type as that used for electrode cleaning can be used. To avoid contamination of the electrode tip, this brush should not be used for cleaning the electrode.

To measure the probe, proceed as follows:

1. Start the required measuring program using function key F10.
2. Put the sample in position.
   - ➔ The sample must fully cover the opening in the spark stand plate.
   - ➔ The sample clamp must have contact with the sample (the safety device is activated).
3. Use the function key F2 or the start/stop button to start the process.
   - ➔ The measurement is fully automated.
   - ➔ The measurement is finished automatically.
   - ➔ The measurement results are displayed on the screen.
4. Perform further measurements as needed.
   - ➔ Use the electrode brush in order clean the electrode tip after each measurement.
   - ➔ Rotate the sample slightly for each further measurement. The respective burn spots must not overlap.
5. Use "Finish" or press the respective function key to end the series of measurement.

✓ The measurement process is finished.

7 Maintenance

Information

In order to ensure the availability and operational safety of the equipment, we recommend having the system checked for correct operation and performance at least once per year by specialized technicians. To find contact addresses of service organizations authorized by SPECTRO go to www.spectro.com

7.1 Maintenance Reminder

The instrument is equipped with a diagnostic system that will prompt you to proceed with a variety of maintenance tasks. The intervals between the individual maintenance tasks are based on certain periods and/or the number of measurements taken during normal use of the instrument. If the instrument is used very little or intensively, the respective defaults should be adjusted accordingly. The following maintenance intervals are monitored.

- General maintenance
- iCALing
- Cleaning the spark stand
- Servicing the argon outlet
- Servicing the air filter

7.2 Maintenance schedule

Start of work	Tasks to be performed
1. Check the argon supply.	The min. pressure in the bottle is 10 bar.
2. Diagnosis system - maintenance or check the number of measurements.	Will be specified by the diagnosis system.
3. Check the water level in the gas-washing bottle.	Top up/replace, see page 45.
4. Check the burn spot.	Visual inspection.

Measuring procedure	Tasks to be performed
Clean the electrode.	Use the small wire brush to clean the electrode after each spark test.
Clean the insert.	After 200 sparks clean the bottom of the insert around the electrode. A brush of the same type as that used for electrode cleaning can be used. To avoid contamination of the electrode tip, this brush should not be used for cleaning the electrode.

Monthly maintenance work	
Change water in gas-washing bottle.	See page 45.
Clean the air optics light inlet window.	See page 34.
Clean the filter mats and replace if necessary.	See page 47.

As required	
iCALizing the measuring device (iCAL)	See page 29.
Replacing the iCALization sample.	See page 48
Standardizing the measuring device.	See page 30.
Replacing standardization samples (optional).	See page 48
Clean spark stand.	See page 37.
Clean/replace the filter insert of the filter bottle.	See page 42.
Replace the filter bottle.	As required.

7.3 Cleaning the UV optics light inlet window



Warning of hazardous voltage!

While the instrument is switched on, the spark stand presents a risk of electrical shock.

- Shut down the Plasma generator (excitation unit) during all work on the spark stand.



Warning! Toxic substances!

When removing the light entry window, contact with the condensate of the samples is likely. Depending on the sample material, the condensate may be toxic.

- Protective gloves must be worn.

To clean the light inlet window, proceed as follows:

1. Turn off the Plasma generator (1).
2. Unscrew the 4 fasteners (2) and remove the spark stand plate (3).

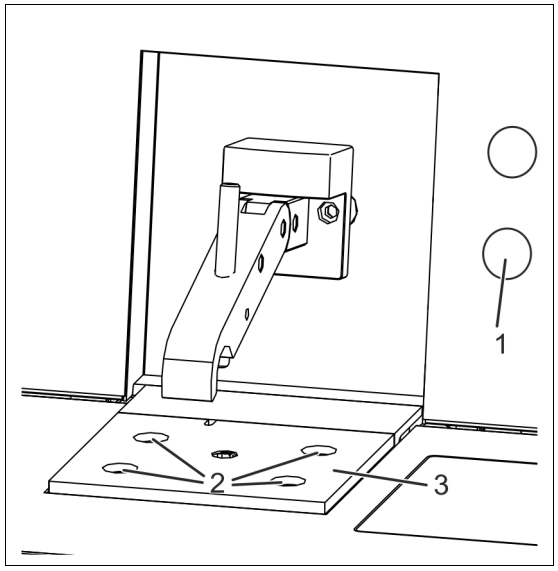

Fig. 7

3. Unlock the cover (1) by pressing both buttons (2) simultaneously.
4. Remove the cover (1).

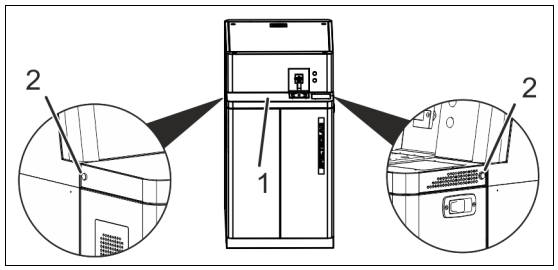

Fig. 8

5. Loosen the union nut (1).

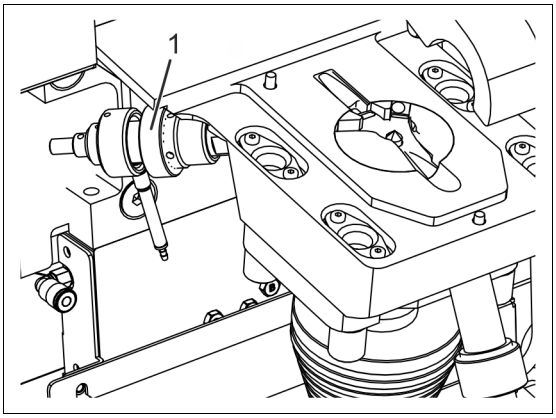

Fig. 9

6. Remove the fiber optic holder (2) from the spark stand.
7. Loosen the window holder (3) from the spark stand.
   - ➔ The quartz window is located between the holder and the O-ring.

   Direct contact with the optical surfaces must be avoided!

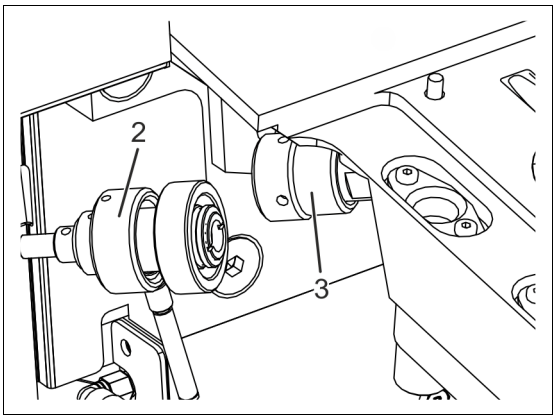

Fig. 10

7. Clean the light inlet window(4), using optical paper or a lint-free soft cloth.

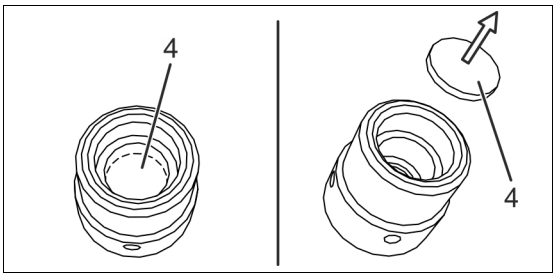

Fig. 11

8. Clean the light channel (5) with a grease-free cloth or a bottle brush with plastic bristles.

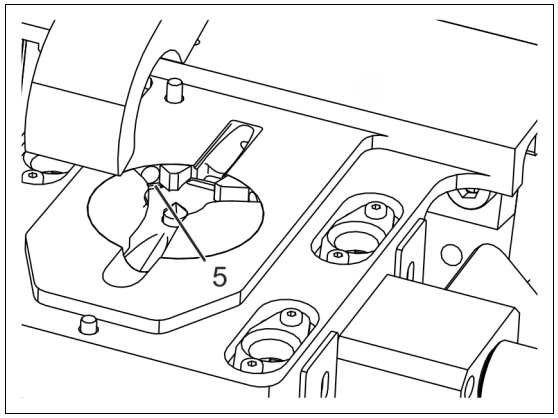

Fig. 12

9. If necessary, use a grease-free cloth to clean the O-ring (6).

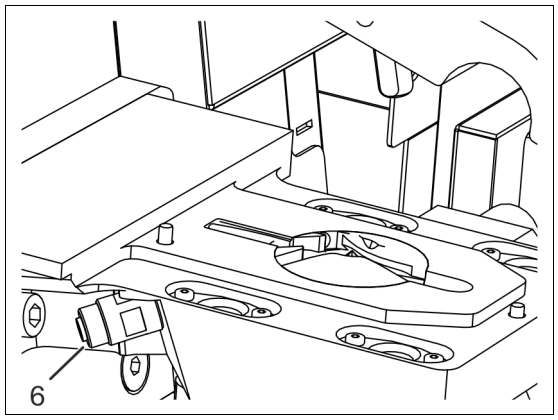

Fig. 13

10. Reassemble components in reverse order.

✓ Cleaning of the air optics light inlet window is now complete.

7.4 Cleaning the spark stand



Warning! High voltage!

If the instrument is switched on, there a risk of electrical shock.

- Shut down the Plasma generator (excitation unit) during all work on the spark stand.



Warning! Toxic substances!

The sparking process produces a black precipitate (metal condensate). The condensate could be toxic or flammable, depending on the sample material.

- Protective gloves and safety goggles must always be worn when cleaning the spark stand and when cleaning the gas-washing bottle or the filter bottle. This also applies when replacing the filter insert. If metals with toxic components have been sparked off, wearing a breathing mask to prevent the inhalation of condensate particles is mandatory.
- When disposing of the condensate, compliance with legal regulations is mandatory.



Warning! Hot surface!

Contacting the electrode increases the risk of burn injuries. During normal operation, the electrode will heat up to several hundred degrees.

- Never touch the electrode with your bare hands, even after shutting down the spectrometer. Always use pliers.

Notice! Instrument damaged or malfunction!

Incorrect cleaning of the spark stand increases the risk of damage to the instrument or malfunctions during measurements.
Please observe the following rules during cleaning:

- Only use a clean, dry and soft cloth to clean the spark stand.
- To clean holes in the spark stand, also use a clean, dry and soft cloth or a bottle brush with plastic bristles.
- Do not use solvents to clean the spark stand. Solvent residues can adversely affect the function of the spectrometer.
- Do not use compressed air (or similar methods) to clean the spark stand. The use of compressed air could cause the condensate to ignite and/or spread inside the laboratory.
- Do not vacuum the spark stand. The condensate could ignite an unsuitable vacuum cleaner. The exhaust filter of the vacuum cleaner may not be suitable for the pore size of the condensate.

The sparking process soils the spark stand with a black precipitate (metal condensate). This metal condensate may create a conductive connection between the electrode and the metal structure of the spark stand wall.

To clean the spark stand, proceed as follows:

1. Turn off the Plasma generator (1).
2. Unscrew the 4 fasteners (2) and remove the spark stand plate (3).

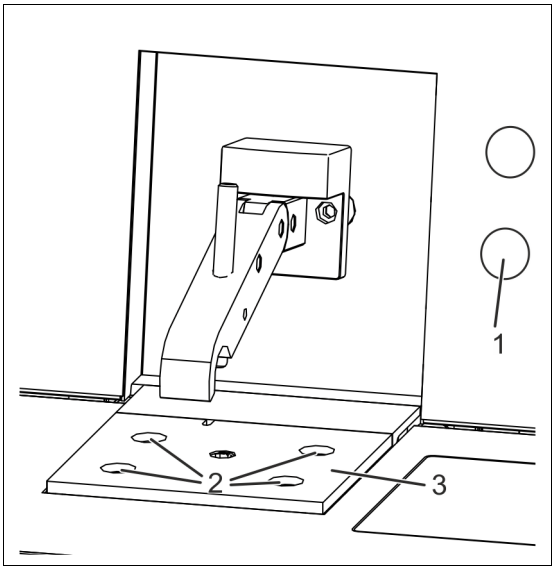

Fig. 14

3. Use a dry, grease-free cloth to clean both sides of the spark stand plate (1).
4. Remove and clean the O-ring (2) of the spark stand plate.

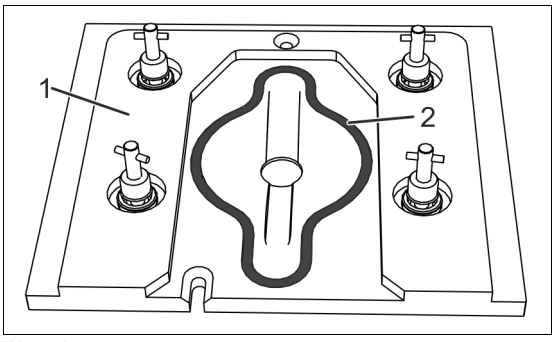

Fig. 15

5. For removal of the electrode (1), unscrew the sealing plug (2). Behind the plug there is a through hole in order to reach the fixing screw of the electrode.

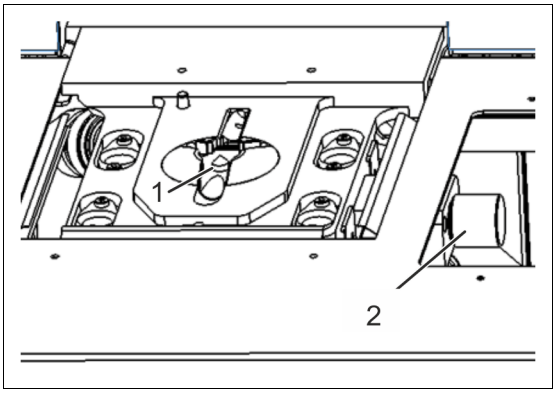

Fig. 16

6. Loosen the fixing screw of the electrode using the Allen key (AF 2.5) until the electrode can be removed.

   ➔ When loosening the electrode, hold firmly on to it. After loosening the screw, a spring presses the screw upward. Loosen the screw only until the electrode can be removed easily.

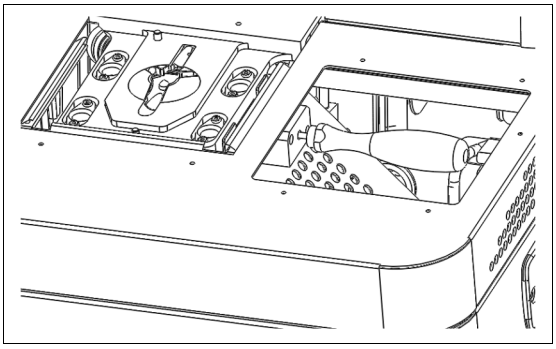

Fig. 17

7. Remove and clean the electrode.

   ➔ If the electrode is worn, it must be replaced.

8. Use the setting gauge (2) in order to remove the spark stand insert (1). Use a dry, grease-free cloth to clean the insert.

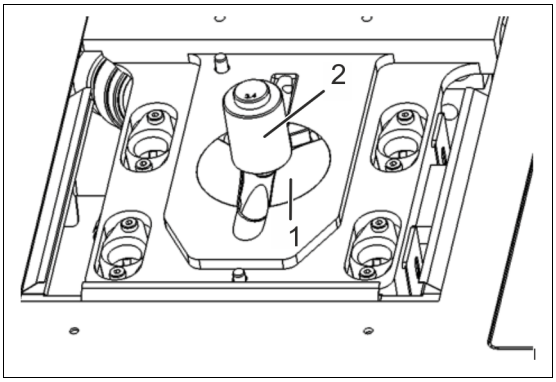

Fig. 18

9. Use a dry, grease-free cloth to clean both sides of the spark stand plate (1).
10. Use a dry, grease-free cloth to clean the surface of the spark stand body.
11. Use a dry, grease-free cloth or a bottle brush with plastic bristles to clean the light channel (2).

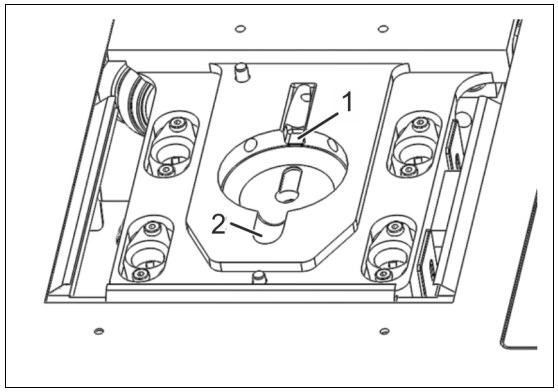

Fig. 19

12. Install the spark stand insert
    - ➔ The spark stand insert is centered on the rear using a contour (1).
    - ➔ Ensure that the spark stand insert is flush with the top edge (2) of the spark stand.

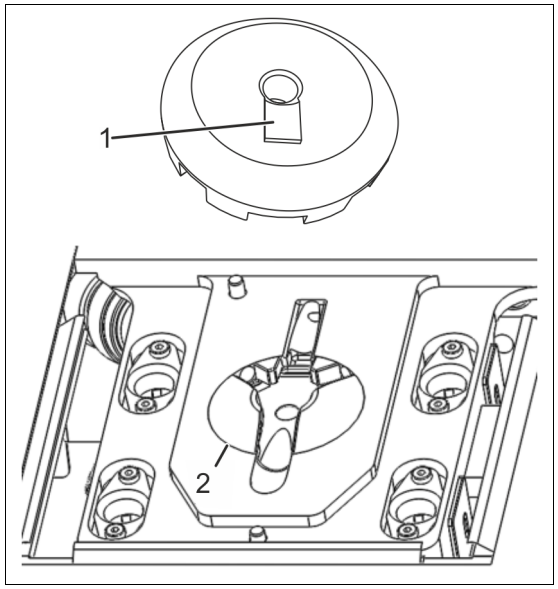

Fig. 20

13. Install the spark stand plate.

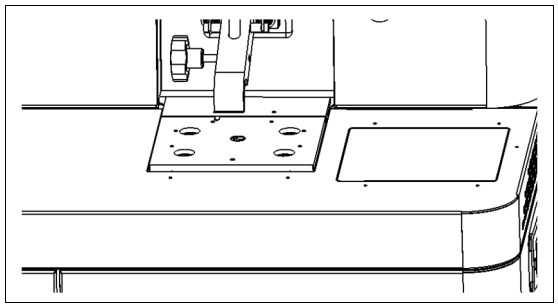
Fig. 21

14. Insert the electrode (1) into the spark stand opening.

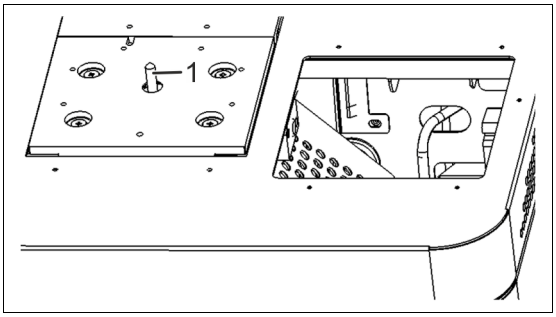

Fig. 22

15. Use the setting gage (1) in order to align the electrode.

    ➔ Press the setting gage with the 3.4 mm shoulder into the spark stand opening and at the same time use the Allen key (2) (AF 2.5) to screw the electrode screw tight.

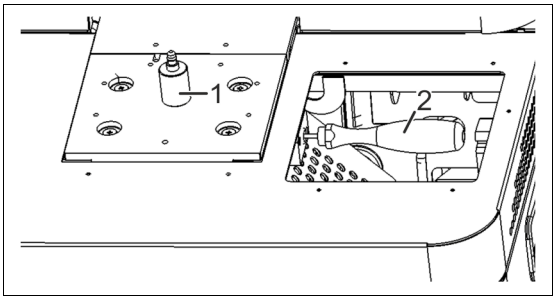

Fig. 23

16. Screw the plug (1) back into the spark stand.

✓ The spark stand is now cleaned.

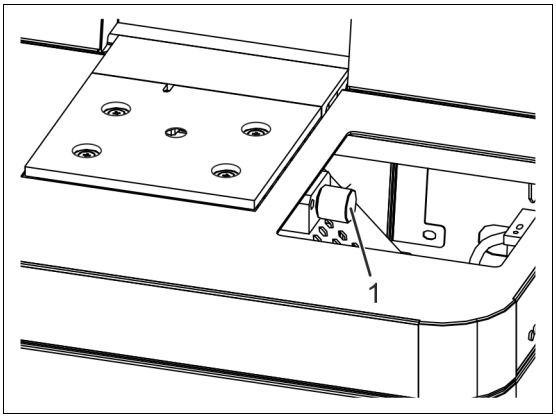

Fig. 24

7.5 Cleaning the exhaust filter system and changing the filter insert



Warning! Toxic or flammable substances!

The sparking process produces a black precipitate (metal condensate). The condensate could be toxic or flammable, depending on the sample material.

- Protective gloves and safety goggles must always be worn when cleaning the spark stand and when cleaning the gas-washing bottle or the filter bottle. This also applies when replacing the filter insert. If metals with toxic components have been sparked off, wearing a breathing mask to prevent the inhalation of condensate particles is mandatory.
- When disposing of the condensate and the used filters, compliance with legal regulations is mandatory.

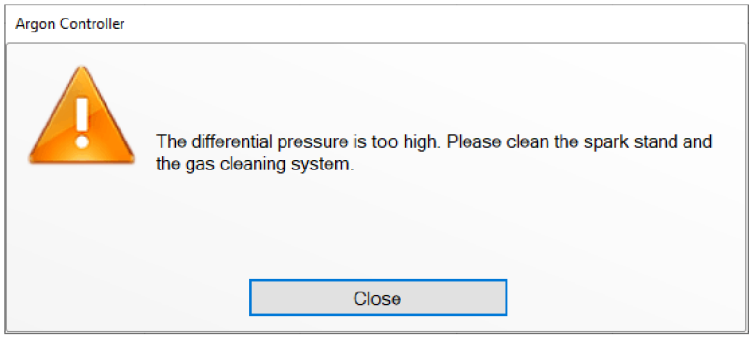

Fig. 25

The exhaust gas filter system must be checked and cleaned at regular intervals, if necessary—at the latest when the software reports a high pressure of the operating gas (see image). If the pressure of the operating gas is too high, the condensate produced during the measurement is not discharged sufficiently and accumulates in the spark stand. It may also be necessary to clean the spark stand as described in the chapter 7.4.

1. Open the door by pulling the side lever (1) and swinging the door to the right.

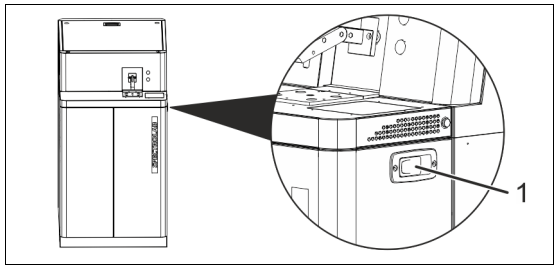

Fig. 26

2. Use the hook spanner (1) to remove the filter container (2).

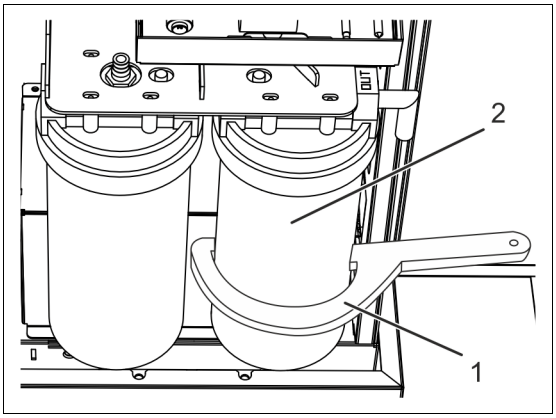

Fig. 27

3. Replace the filter and screw the filter container back into the holder.
   - ➔ Ensure that the O-ring (1) is clean and sits inside the groove. If necessary, use a clean cloth to clean the O-ring.
   - ➔ The filter container should only be tightened by hand.
   - ➔ The filter bottle screws in easily. If not, the filter insert is not positioned correctly.

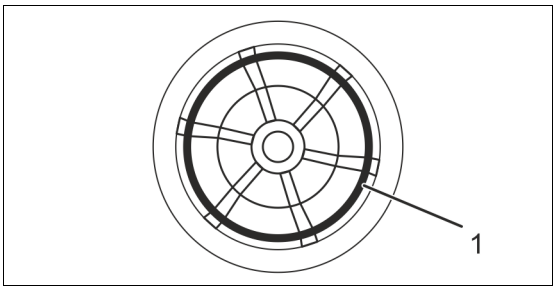

Fig. 28

4. If the exhaust filter system is still clogged, the nozzle in the water bottle may be blocked.
   - ➔ Use the hook spanner to remove the water bottle (1).

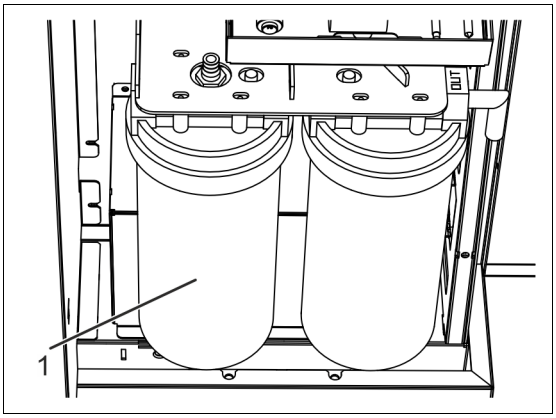

Fig. 29

- ➔ Pull the nozzle (2) out of the water hose.
- ➔ Use a cloth to clean the nozzle and replace it.
- ➔ Screw the water bottle back into the holder. The water bottle should only be tightened by hand.

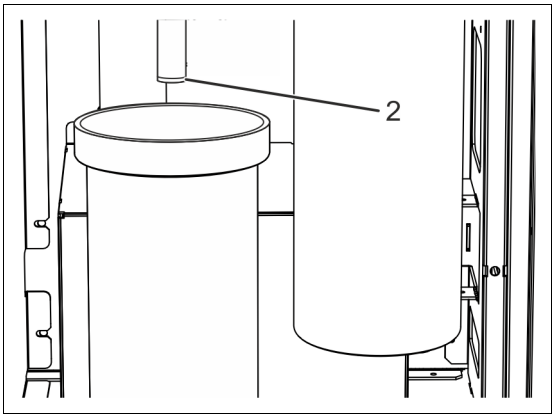

Fig. 30

✓ The exhaust filter system is clean.

7.6 Inspecting the gas-washing bottle



Warning! Toxic or flammable substances!

The sparking process produces a black precipitate (metal condensate). The condensate could be toxic or flammable, depending on the sample material.

- Protective gloves and safety goggles must always be worn when cleaning the spark stand and when cleaning the gas-washing bottle or the filter bottle and respiratory protection. This also applies when replacing the filter insert.
- When disposing of the condensate and the used filters, compliance with legal regulations is mandatory.

In order to inspect the gas-washing bottle, proceed as follows:

1. Open the door by pulling the side lever (1) and swinging the door to the right.

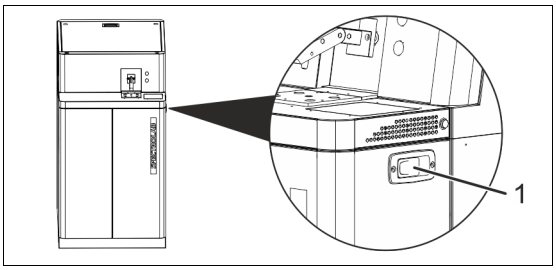

Fig. 31

2. Check the water level inside the gas-washing bottle.
   - ➔ The washing bottle (1) must be filled half with water. (Min. filling level 25%, max. filling level 50%).
   - ➔ The water must be clean.

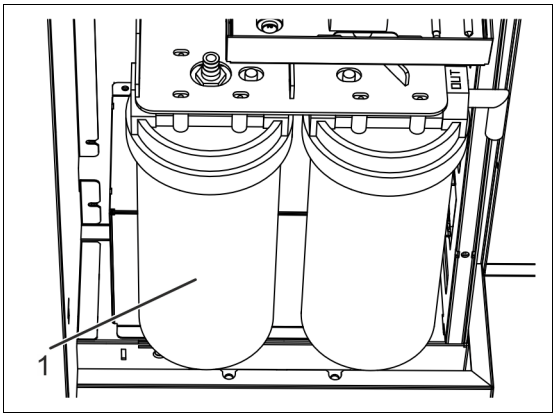

Fig. 32

3. To refill, unscrew the water bottle from the holder by hand. The hook spanner (2) may also be used in order to unscrew the holder.

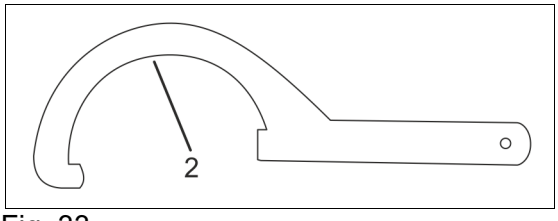

Fig. 33

4. Refill water or change it as required.

5. Make sure that the O-ring (1) sits in the groove and is clean. If necessary, use a clean cloth to clean the O-ring.
6. Screw the gas-washing bottle back manually.

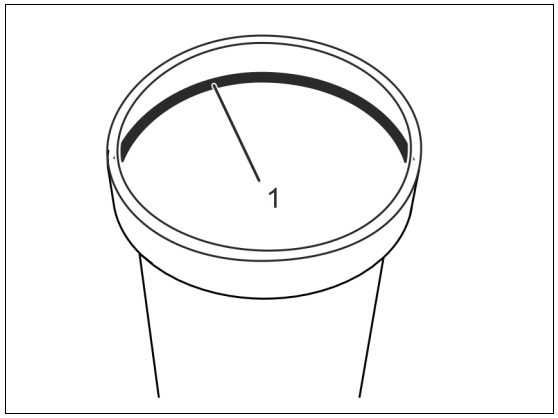

Fig. 34

✓ Checking/changing the water is now complete.

7.7 Replacing the filter mats

The SPECTROLAB LAS01 has three openings on the left side for the fresh air supply (cooling system (1), electronics room (2) and plasma generator/spark stand (3)). The filter mats for these openings are all of the same size, whereby two filter mats are required for opening 1.

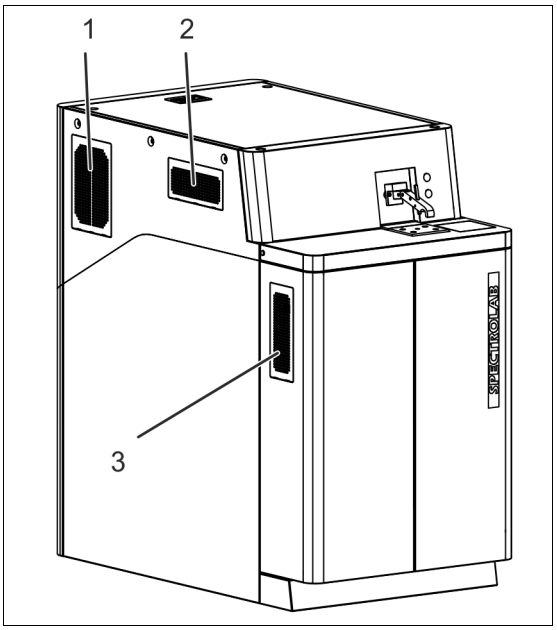

Fig. 35

1. Press down onto the upper left (1) and right (2) corners of the cover.

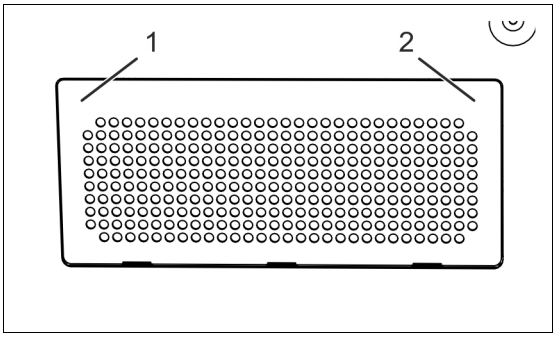

Fig. 36

2. This unlocks the covers and they can be folded forward. Now, the filter mats can be pulled up and removed.

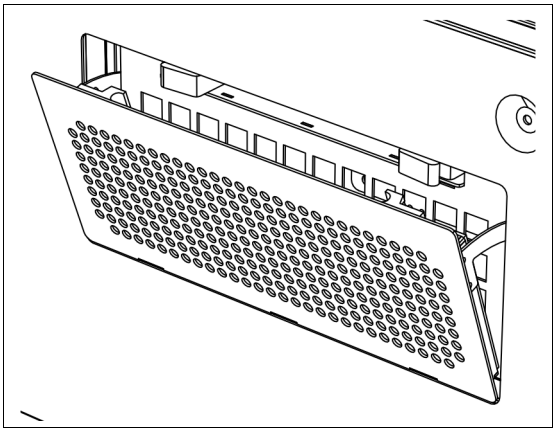

Fig. 37

3. Remove the old filter mats.
4. Install the new filter mats.
5. Reinstall the covers.
   ➔ Insert the covers from above and press against the top left and right corners of the cover until it clicks into place.

✓ Now, the filter mats are replaced.

7.8 Replacing the ICALization sample

When the ICALizing sample is almost used up, a replacement must be provided.

The composition of the ICALizing sample is different from that of the original samples. The intensities of the new samples must be matched to those of the old samples.

Please contact your Service Center.

Information

Do not discard the old ICALization sample before the intensities have been matched. Matching is not possible without using the old samples.

7.9 Replacing the standardization sample

When the standardization sample is almost used up, a replacement must be provided.

The composition of the new standardization samples is different from that of the original samples. The intensities of the new samples must be matched to those of the old samples.

Information

Do not discard the old standardization samples before the intensities have been matched. Matching is not possible without using the old samples.

8 Status messages

The status information is displayed in the footer of the software. These indications provide important information about the status of the instrument.

The following information is available:

Status information	Description
Ready	The instrument is ready for measurement if all specifications according to chapter 6.4.1 on page 29 have been met.
Temperature of the optical system	Is shown in red as soon as the optimum temperature of the optical system is outside the temperature range.
Sample Clamp up	The sample clamp is not folded down or a conductive contact with the sample has not been established.
Safety check required	The safety circuit is being checked. Briefly lift sample clamp in order to interrupt the contact to the sample.

9 Troubleshooting

Malfunction	Cause	Remedy
The instrument cannot be switched on.	The power plug is not plugged in properly.	Check if the power plug was properly plugged in.
	Power is not available.	Check the power supply.
	Defective fuse.	Check the fuse inside the mains connection socket. If necessary, replace the fuse.
The burn spot is incorrect.	The argon outlet (exhaust) is clogged with condensate.	Clean the spark stand including the argon outlet.
	Insufficient argon supply.	Check argon supply and pressure.
	Poor argon quality.	Connect new argon; specifications, chapter 3 „Technical data“ on page 20.
	Incorrect electrode gap.	Clean the electrode and re-adjust the gap using the spacer.
	Plasma generator faulty.	Please contact your service center.
	The samples have not been prepared properly. The sample surface is not flat enough or has inclusions.	Prepare sample properly, (grind, turn or mill).
Low intensities in the optical system.	Light inlet window soiled.	Clean light inlet window.
The temperature of the optic system is too high (see "Status messages").	Dirt has accumulated on the filter mat.	Change the filter mat.

Malfunction	Cause	Remedy
Limit values are not maintained during iCALising.	Insufficient intensity.	1. Check argon. 2. Clean spark stand, adjust electrode. 3. Clean light inlet window. 4. Re-profile instrument again and, if necessary, contact the Service Department.
During standardization, factors < 2 are shown in red or Value dropped below the minimum limit of the matrix-depending reference channel e.g.: Fe 273 nm.	Insufficient intensity.	1. Check argon. 2. Clean spark stand, adjust electrode. 3. Clean light inlet window. 4. Profile instrument, standardize again (check sequence of standardization samples). Call service if required.
During standardization, factors < 0.5 are shown in red or The maximum limit of the typical measurement value of a matrix-depending reference channel has been exceeded, e.g.: Fe 273 nm.	Intensities too high.	1. Check excitation parameters. Call service if required.

9.1 Error messages

Error	Cause	Remedy
When starting the “Spark Analyzer Pro” software, the instrument switches into DEMO mode.	Communication	Exit the “Spark Analyzer Pro LAB” software. Disconnected the spectrometer from the power for a short time. After a waiting period of approx. 60 sec., restart the “Spark Analyzer Pro LAB” software.
	The connection between the PC and the spectrometer is interrupted.	Connect the spectrometer and the PC with the network cable.
	Instrument without power.	Check the power supply.
Safety check.	The safety circuit has not been activated within the last 5 minutes.	Acknowledge the message. Move the clamp up for approx. 1 second.
An error has occurred whilst attempting to access the spectrometer (Plasma generator is switched off, measurement could not be started). Check the condition of the spectrometer.	Plasma generator is not switched on.	Switch on the Plasma generator. Confirm by pressing “OK”.
	Insufficient argon supply.	Check the argon supply: Pre-pressure (4.8 – 5.0 bar (69.6 – 72.5 psi)) and available quantity.
An error has occurred during spectrometer access (clamp up, measurement could not be started). Check the condition of the spectrometer.	Safety circuit not closed.	The safety circuit "Clamp – Sample – Spark stand" is not closed. Ensure electric contact is provided.

9.2 Diagnosis tool

An LED symbol in the status bar permanently indicates the general status of the instrument.

To open the diagnostic system, click the green or red LED symbol in the lower right-hand corner of the status bar.



Fig. 38

When the instrument is ready for operation, the green LED symbol is lit. If an error occurs, the LED symbol changes to red. For a detailed description, refer to the online help of the instrument.

10 Spare parts and consumables

You can find the spare parts and consumables for this instrument under "Support - Parts Catalogue" (Service – Parts Catalogue) on our website at www.spectro.com.

11 De-commissioning

Only organizations or persons authorized by the instrument manufacturer shall be permitted to de-commission the instrument. Please contact your Service Center.

12 Manufacturer address

SPECTRO Analytical Instruments GmbH

Boschstr. 10

D-47533 Kleve

Germany

Tel.: +49.2821.8 92-0

Fax: +49.2821.8 92-22 00

http://www.spectro.com